Nails & Glue by J. Heisz

Not For Commercial Production
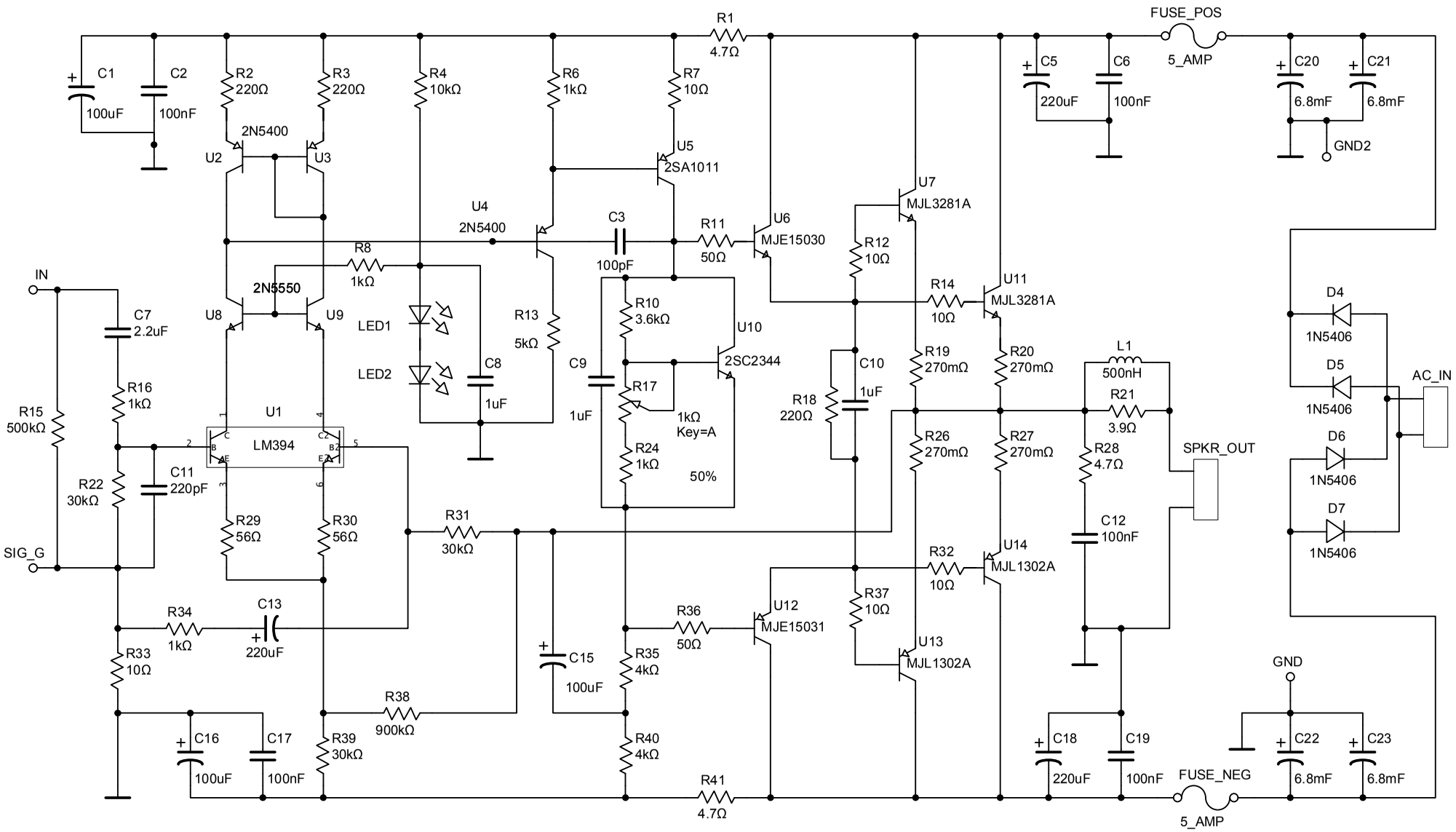
Title: patchwork Date: 2007-12-26