THE ULTIMATE

by Rickard Berglund, Höör, Sweden

At last, the battle between SE and PP is won!

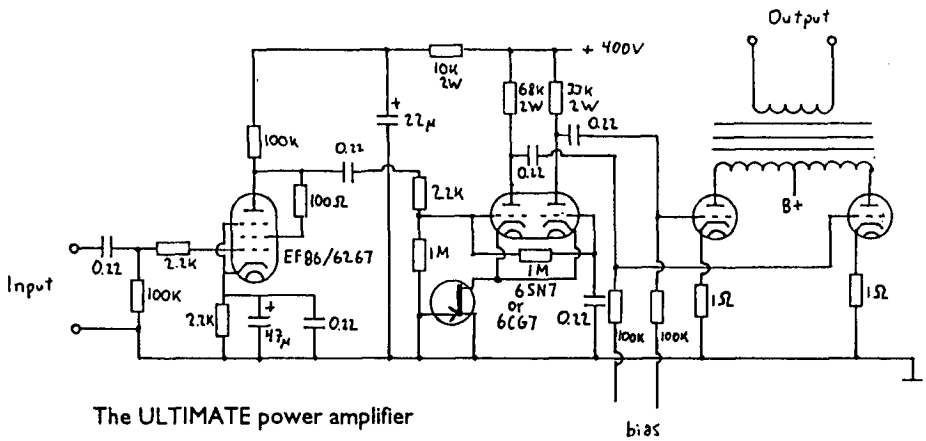

The ULTIMATE power amplifier

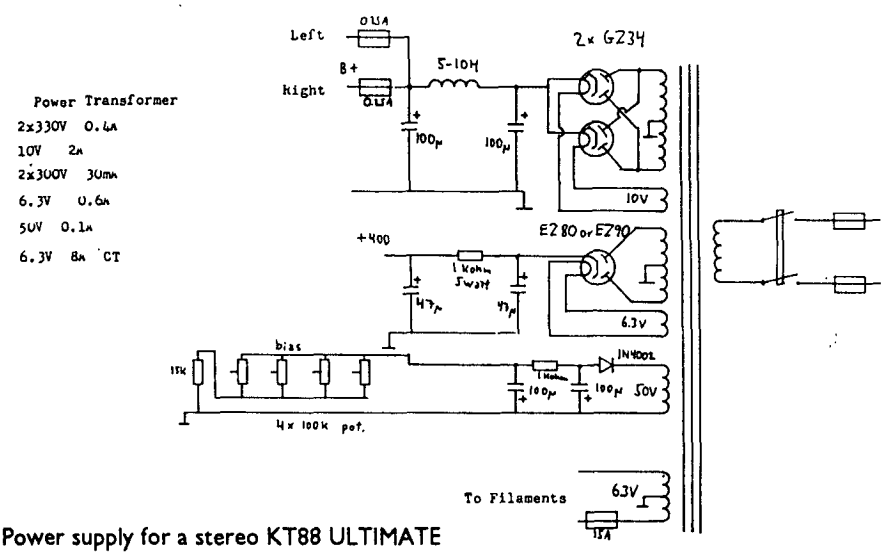

Power supply for a stereo KT88 ULTIMATE

Tube	B+	Pri Z	P_{out} W	Plate I mA/tube	Bias
2A3	250	6600	7	60	-45
300B	350	7600	14	80	-72
6C19P	250	13000	6	40	-100
6C33'	250	2800	18	150	-100
6080	180	5200	7	70	-75
6336	250	3500	15	110	-120
6L6 *	400	13000	9	50	-38
KT-88*	400	8000	15	80	-43
PL519*	400	9000	18	80	-55?

* triode connected

TABLE 1

Determining transformer secondary voltage for desired DC output:

Capacitor input filter with solid state full-wave bridge or full-wave vacuum tube rectifiers.

DC Volts	SS bridge	Tube
180	140	2X160
250	190	2X210
350	270	2X290
400	310	2X330

When solid state rectifiers are used, the transformer secondaries should be rated for twice actual current.

TABLE 2

Many people like single ended amplifiers because of the natural harmonic relationship of this type of amplifier. The second harmonic dominates over the third harmonic, the third dominates over the fourth, and so on. The main disadvantage of single ended amplifiers is that the output transformer must be expensive and heavy in order to maintain low bass response.

The ULTIMATE amplifier consists of a standard push-pull output transformer connected to two triode output tubes or two triode connected pentodes or tetrodes. The drive signal is not equal for the two tubes as it is in a push-pull amplifier. In the ULTIMATE amplifier, the drive signal for one of the tubes is twice as big as that of the other tube. This approach produces a harmonic spectrum very close to that of a single ended amplifier. Another advantage is very smooth clipping, much better than a push-pull amplifier.

The ULTIMATE amplifier circuit is shown to the left. The transistor can be any low noise J-FET with an Idss of 8-10 mA. The one ohm resistor in the cathode circuit should be used for bias measurements. If you use directly heated triodes, place the resistor in the plate circuit instead.

Table 1 shows you some of the output tubes that you can use. The damping factor is dependent on the output tubes: KT-88 provides a damping factor of 4, 300B gives 5, and 6336 gives 6. The input sensitivity is also dependent on the choice of output tubes. A volume control can be fitted to the input if desired.

Details of a power supply for a stereo KT-88 ULTIMATE amplifier are given. If you use 6336 or 6C33 output tubes, you must use one power supply per channel or substitute solid state rectifiers for the GZ-34 tube rectifier due to high current requirements. I have not done any distortion measurements but I estimate that the ULTIMATE amplifier gives 4% second harmonic and 1% third harmonic at full power output. Table 2 provides transformer secondary voltages required for different tube types.