SCHEMATIC DIAGRAMS (9/12)

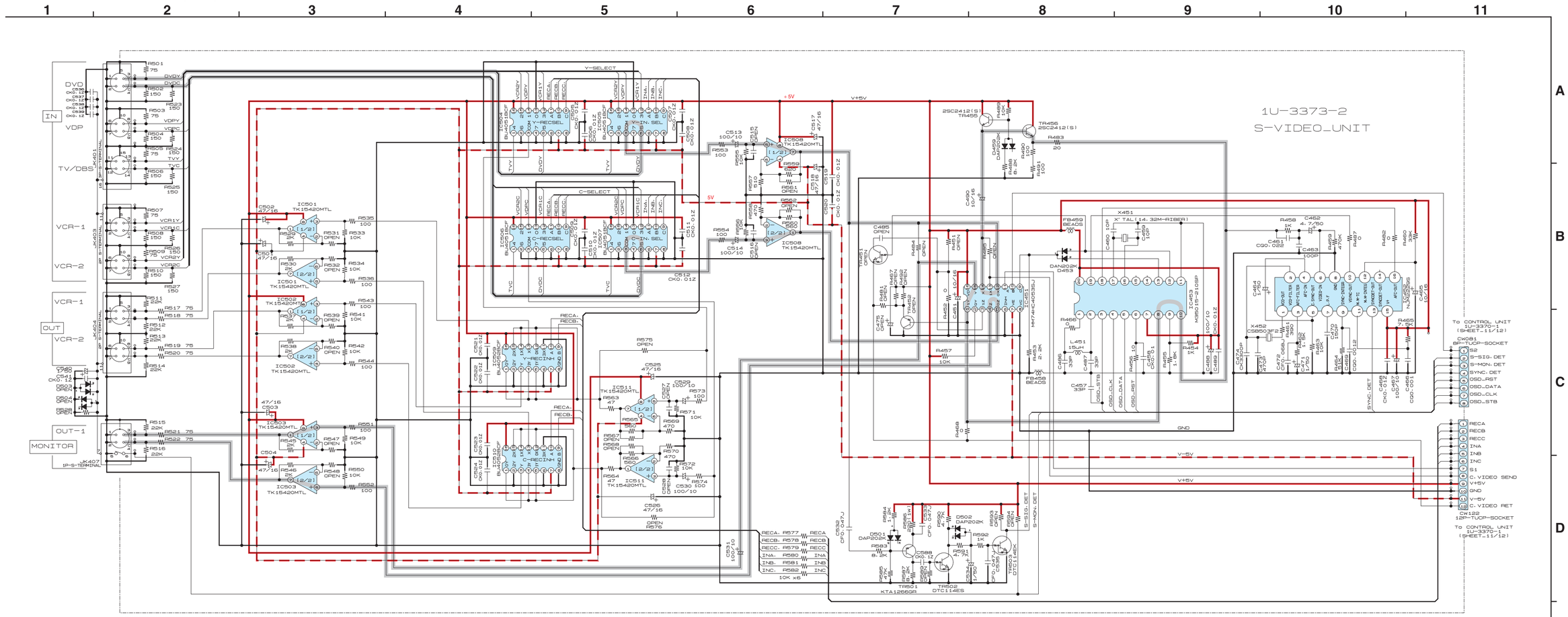

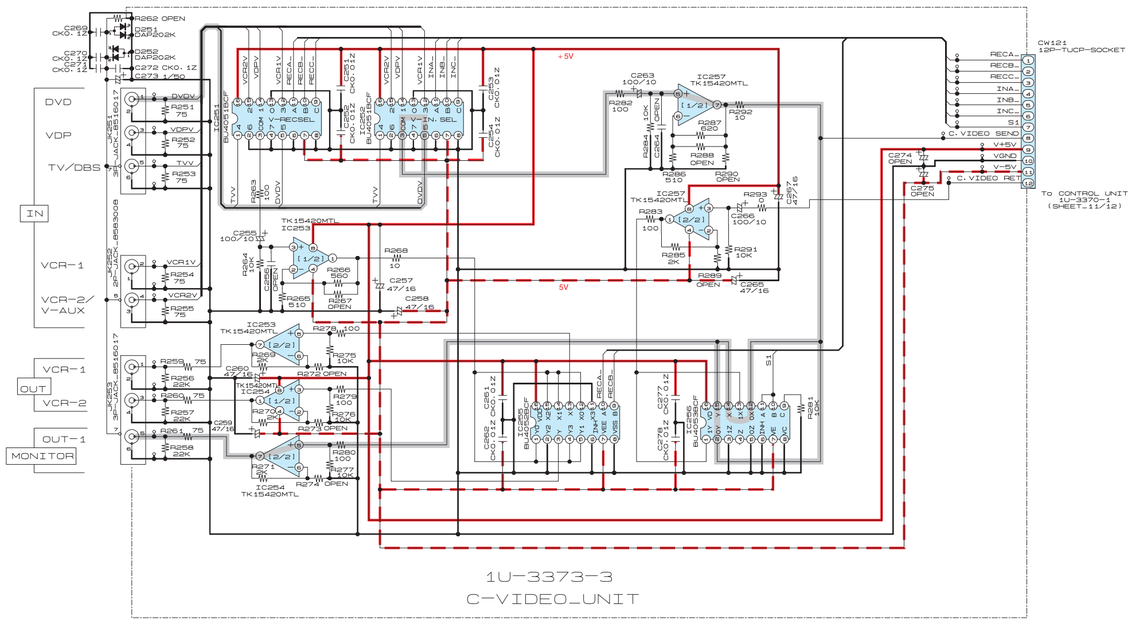

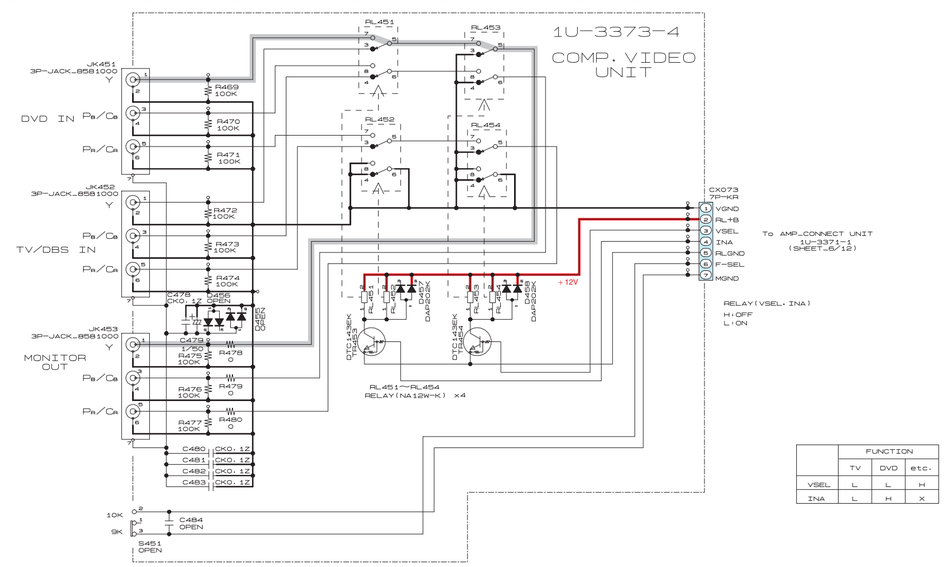

	FUNCTION		
	TV	DVD	etc.
VSEL	L	L	H
INA	L	H	X

WARNING:
Parts marked with this symbol ⚠ have critical characteristics.
Use ONLY replacement parts recommended by the manufacture.

CAUTION:
Before returning the unit to the customer, make sure you make either (1) a leakage current check or (2) a line to chassis resistance check. If the leakage current exceeds 0.5 milliamps, or if the resistance from chassis to either side of the power card is less than 460kohms, the unit is defective.

WARNING:
DO NOT return the unit to the customer until the problem is located and corrected.

NOTICE
ALL RESISTANCE VALUES IN OHM. k=1,000 OHM M=1,000,000 OHM
ALL CAPACITANCE VALUES IN MICRO FARAD. P=MICRO-MICRO FARAD
EACH VOLTAGE AND CURRENT ARE MEASUERD AT MO SIGNAL INPUT CONDITION.
CIRCUIT AND PARTS ARE SUBJECT TO CHANGE WITHOUT PRIOR NOTICE.

+ B LINE
– B LINE
SIGNAL LINE

SCHEMATIC DIAGRAMS (9/12)
1U-3373-2 S-VIDEO UNIT
1U-3373-3 C-VIDEO UNIT
1U-3373-4 COMP. VIDEO UNIT