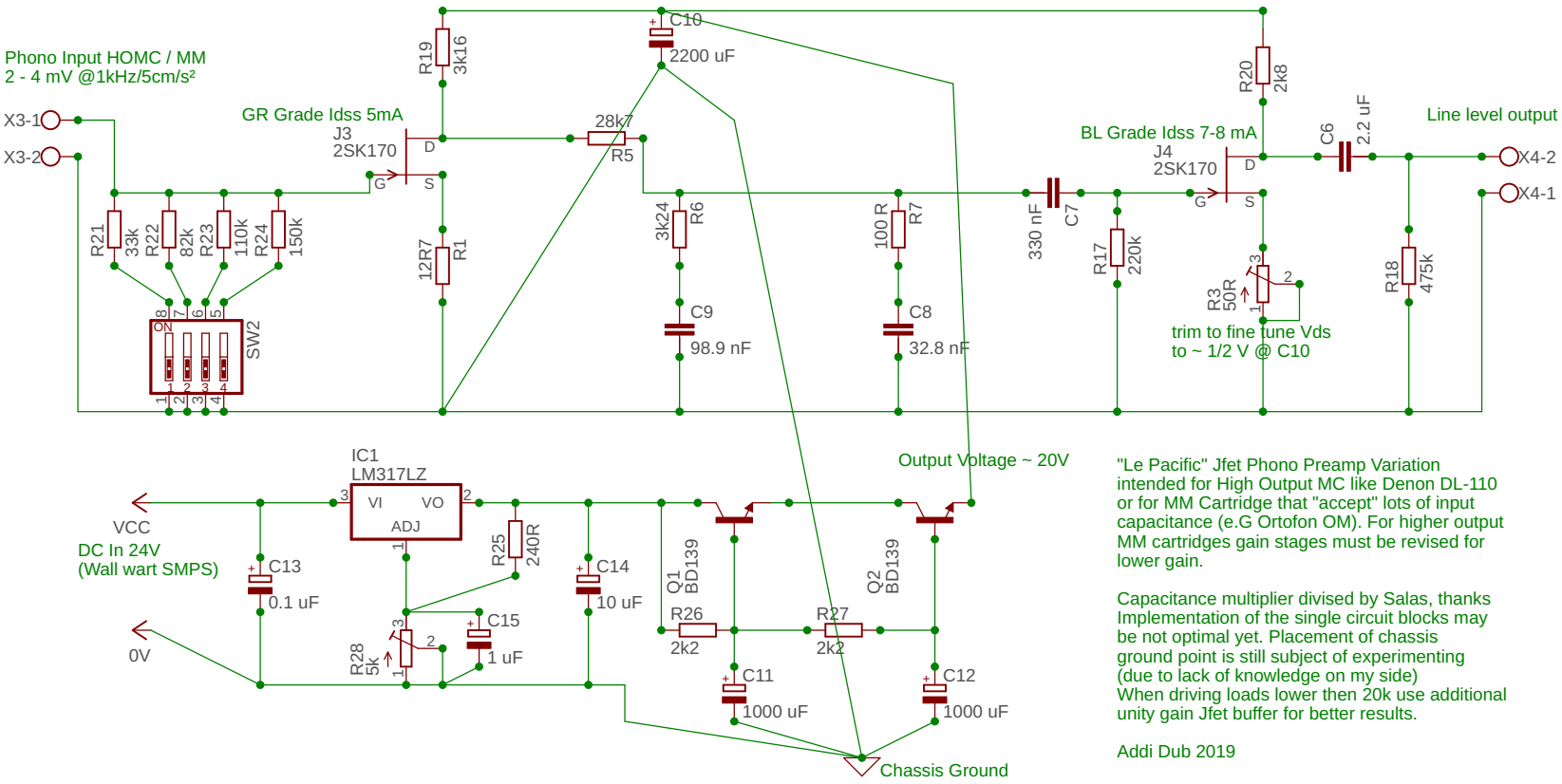

"Le Pacific" Jfet Phono Preamp Variation intended for High Output MC like Denon DL-110 or for MM Cartridge that "accept" lots of input capacitance (e.G Ortofon OM). For higher output MM cartridges gain stages must be revised for lower gain.

Capacitance multiplier divised by Salas, thanks
Implementation of the single circuit blocks may be not optimal yet. Placement of chassis ground point is still subject of experimenting (due to lack of knowledge on my side)
When driving loads lower then 20k use additional unity gain Jfet buffer for better results.

Addi Dub 2019