To use unregulated:	To use regulated:	To bypass coils for heavy loads(>350ma)
1) USE J1/J2	1) Omit J1/J2	1) Add Jumpers JP1 - JP4(Normally Omitted)
2) Omit Restsors 5 -9		
3) Omit Capacitors 7-10		
4) Omit IC1/IC2		
5) Omit Diodes 9-12		

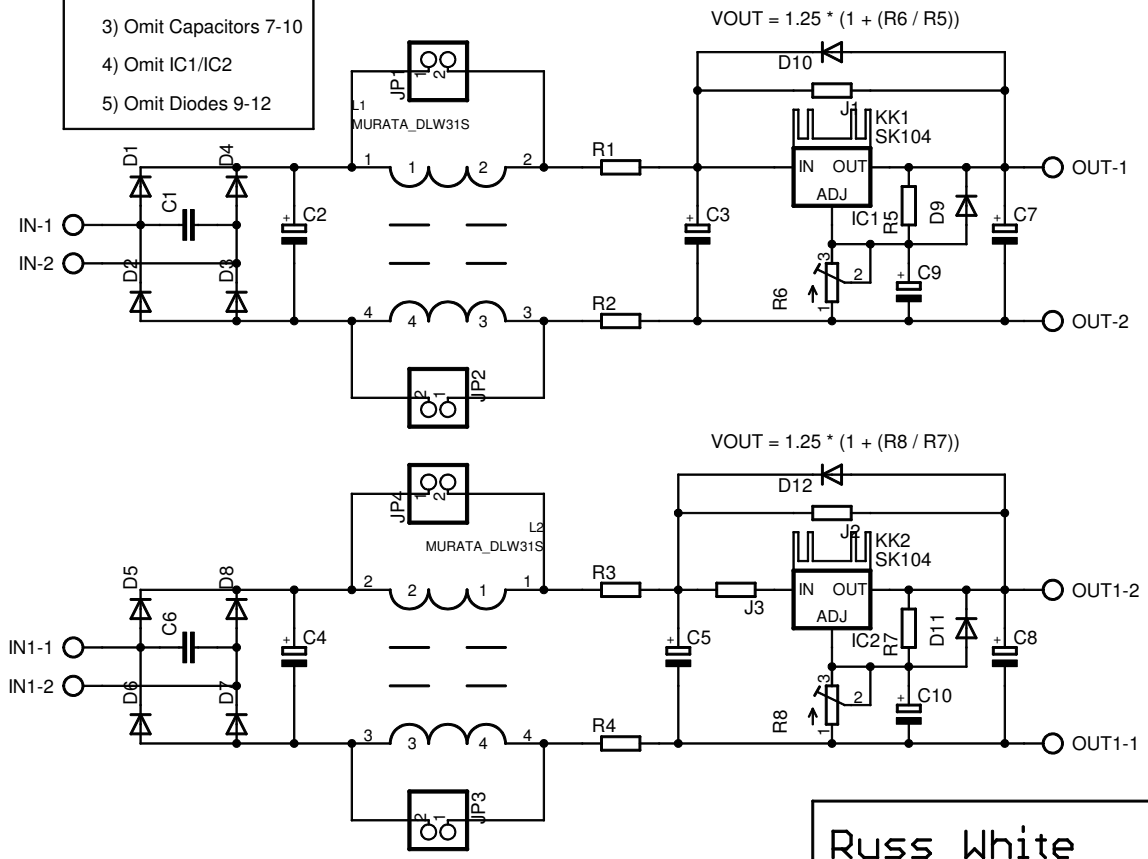

Russ White

TITLE: opus_ps2

Document Number:

REV:

Date: 9/15/2006 06:28:02p

Sheet: 1/1