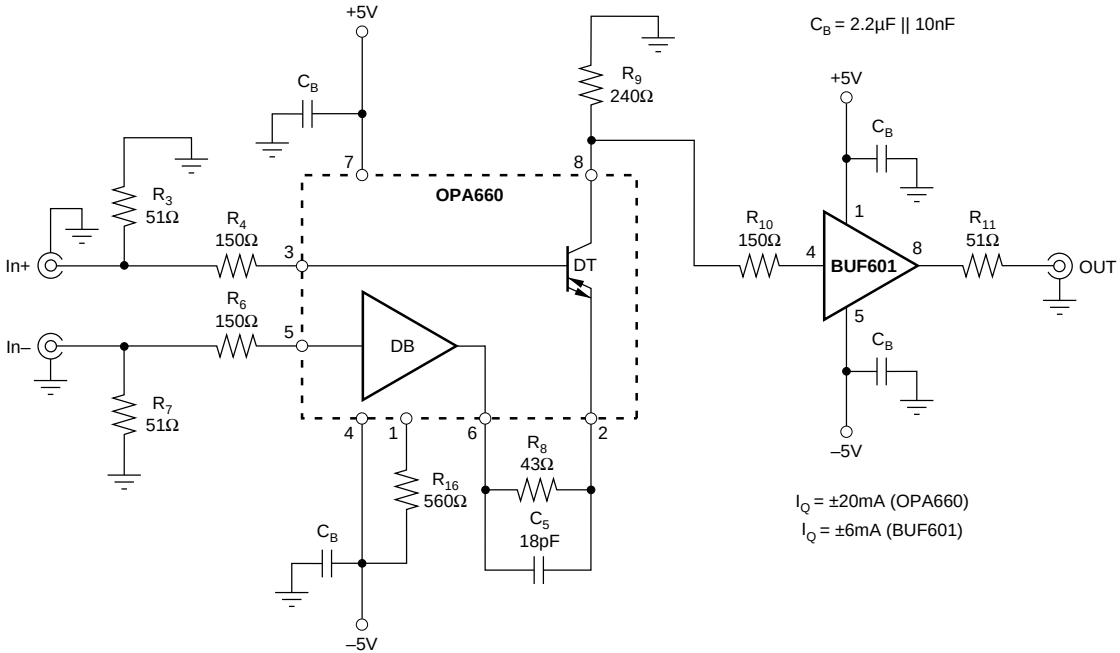
+5V
C_B
C_B = 2.2µF || 10nF
R_9
240Ω
+5V
C_B
7
8
OPA660
R_3
51Ω
R_4
150Ω
3
DT
R_{10}
150Ω
1
4
BUF601
8
R_{11}
51Ω
OUT
In+
R_6
150Ω
5
DB
In–
5
C_B
R_7
51Ω
4
1
6
2
R_8
43Ω
R_{16}
560Ω
C_5
18pF
C_B
–5V
–5V
I_Q = ±20mA (OPA660)
I_Q = ±6mA (BUF601)