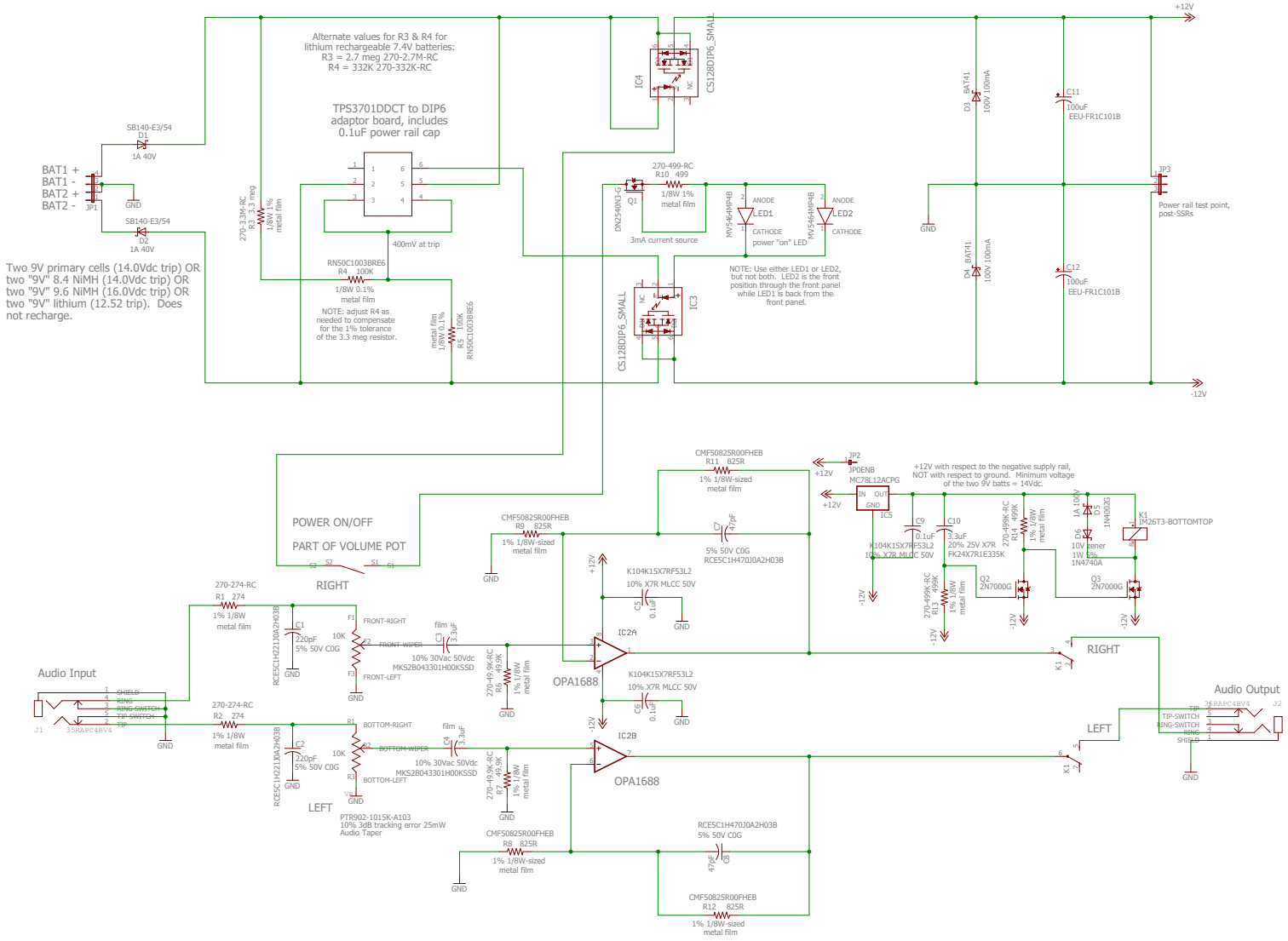OPA1688 CMOY V4.0
agdr Audio 2016