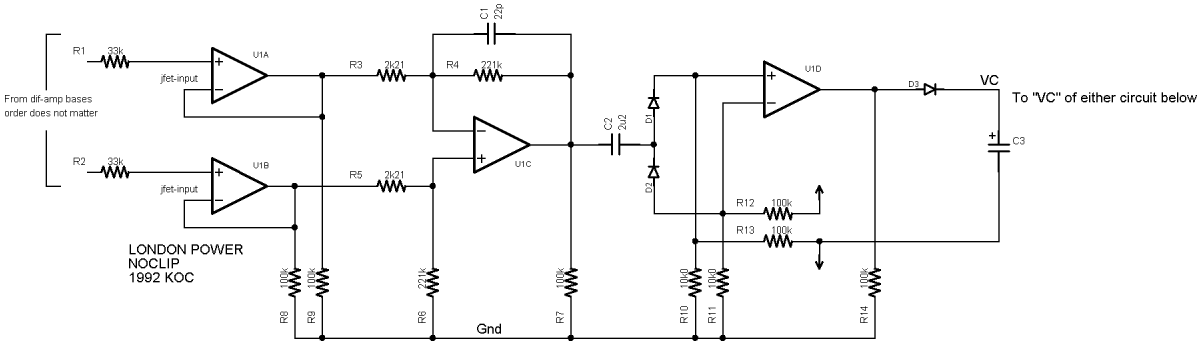
From dif-amp bases
order does not matter
R1
33k
R2
33k
jfet-input
jfet-input
U1A
U1B
R3
2k21
R5
2k21
R4
221k
C1
22p
U1C
C2
2u2
D1
D2
U1D
D3
VC
To "VC" of either circuit below
C3
R12
100k
R13
100k
LONDON POWER
NOCLIP
1992 KOC
R8
100k
R9
100k
R6
221k
R7
100k
R10
10k0
R11
10k0
R14
100k
Gnd

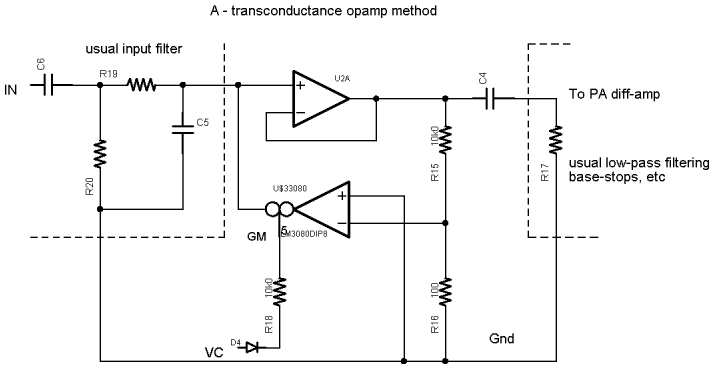
A - transconductance opamp method
usual input filter
IN
C6
R19
C5
R20
U2A
C4
To PA diff-amp
R15
10k0
R17
usual low-pass filtering
base-stops, etc
U$33080
GM
5
SM3080DIP8
R18
10k0
R16
100
D4
VC
Gnd

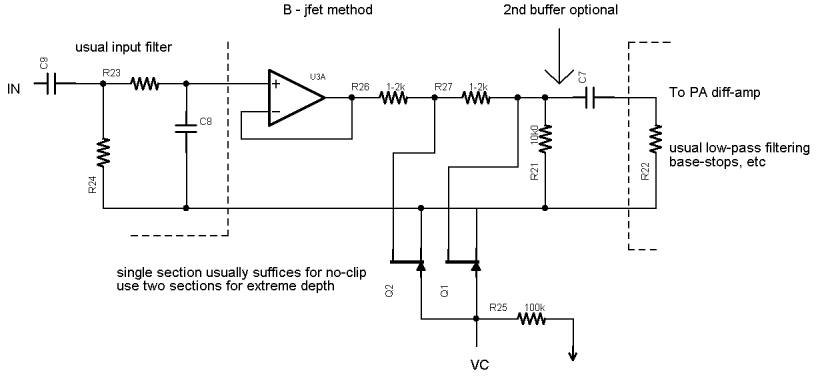
B - jfet method
2nd buffer optional
usual input filter
IN
C9
R23
C8
R24
U3A
R26
1-2k
R27
1-2k
C7
To PA diff-amp
R21
10k0
R22
usual low-pass filtering
base-stops, etc
single section usually suffices for no-clip
use two sections for extreme depth
Q2
Q1
R25
100k
VC