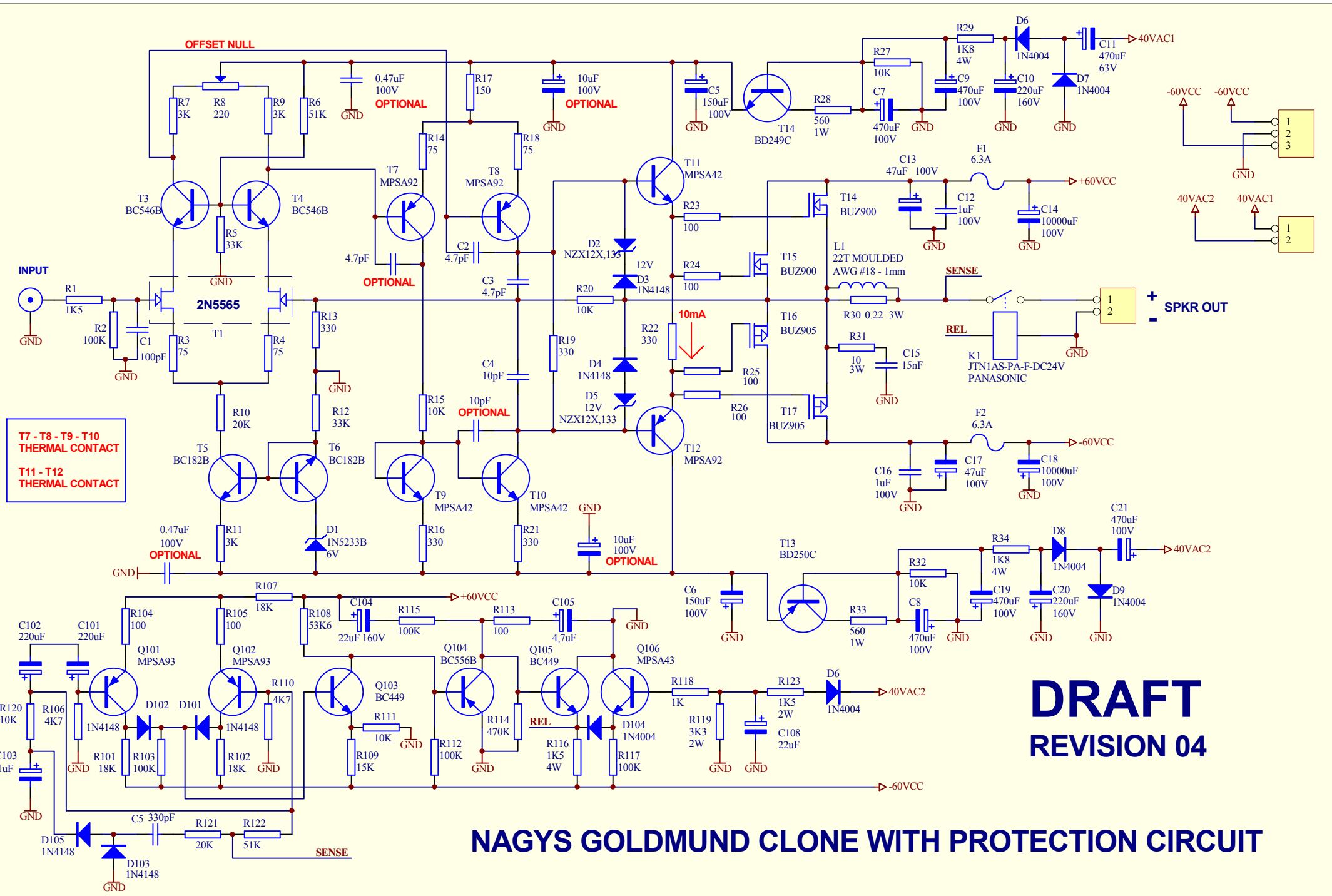
OFFSET NULL
INPUT
2N5565
T1
T3 BC546B
T4 BC546B
T5 BC182B
T6 BC182B
T7 MPSA92
T8 MPSA92
T9 MPSA42
T10 MPSA42
T11 MPSA42
T12 MPSA92
T13 BD250C
T14 BD249C
T14 BUZ900
T15 BUZ900
T16 BUZ905
T17 BUZ905
T7 - T8 - T9 - T10 THERMAL CONTACT
T11 - T12 THERMAL CONTACT
10mA
L1 22T MOULDED AWG #18 - 1mm
SENSE
REL
K1 JTN1AS-PA-F-DC24V PANASONIC
SPKR OUT
+60VCC
-60VCC
40VAC1
40VAC2
GND
OPTIONAL
Q101 MPSA93
Q102 MPSA93
Q103 BC449
Q104 BC556B
Q105 BC449
Q106 MPSA43
D1 1N5233B 6V
D2 NZX12X,133
D3 1N4148
D4 1N4148
D5 12V NZX12X,133
D6 1N4004
D7 1N4004
D8 1N4004
D9 1N4004
D101 1N4148
D102 1N4148
D103 1N4148
D104 1N4004
D105 1N4148
DRAFT
REVISION 04
NAGYS GOLDMUND CLONE WITH PROTECTION CIRCUIT