NAD 3125 POWER SUPPLY

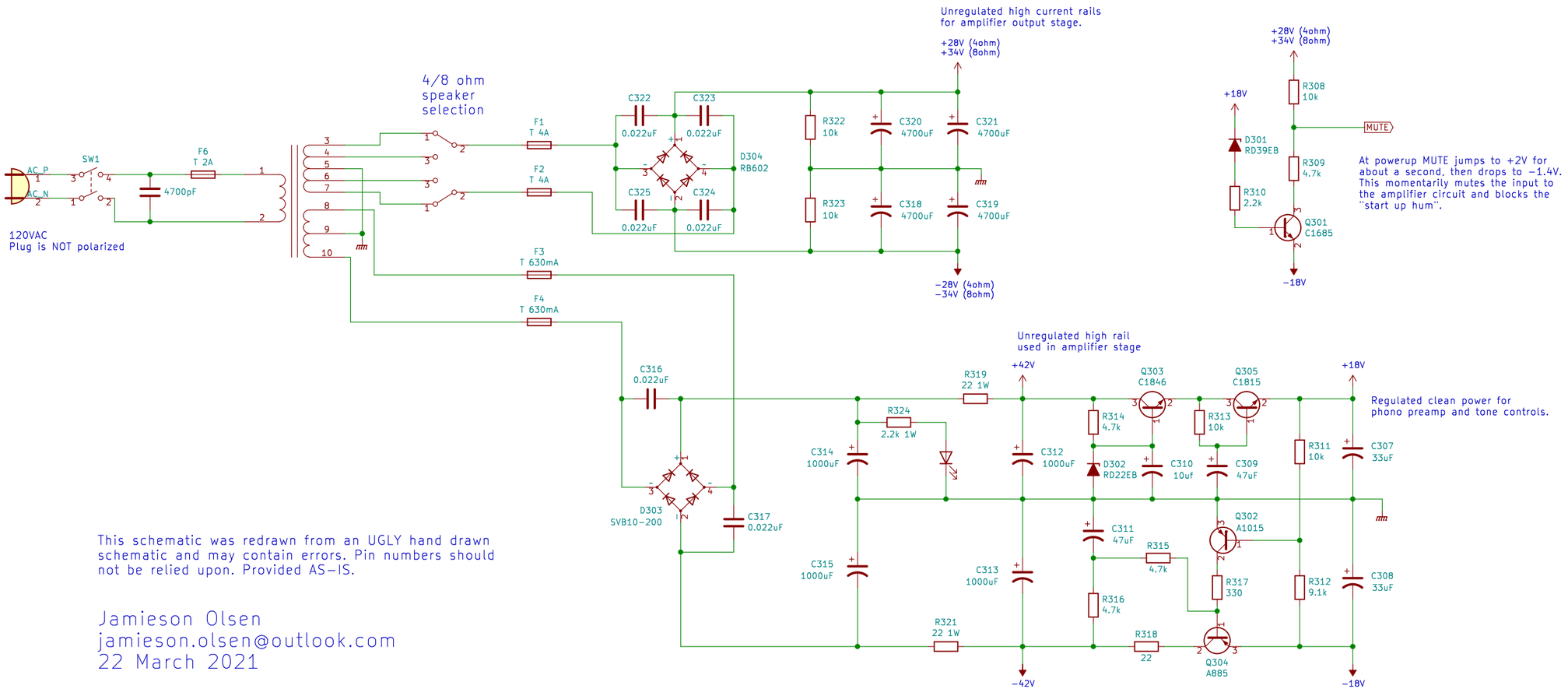

This schematic was redrawn from an UGLY hand drawn schematic and may contain errors. Pin numbers should not be relied upon. Provided AS−IS.

Jamieson Olsen
jamieson.olsen@outlook.com

22 March 2021