NAD 3125 POWER AMPLIFIER

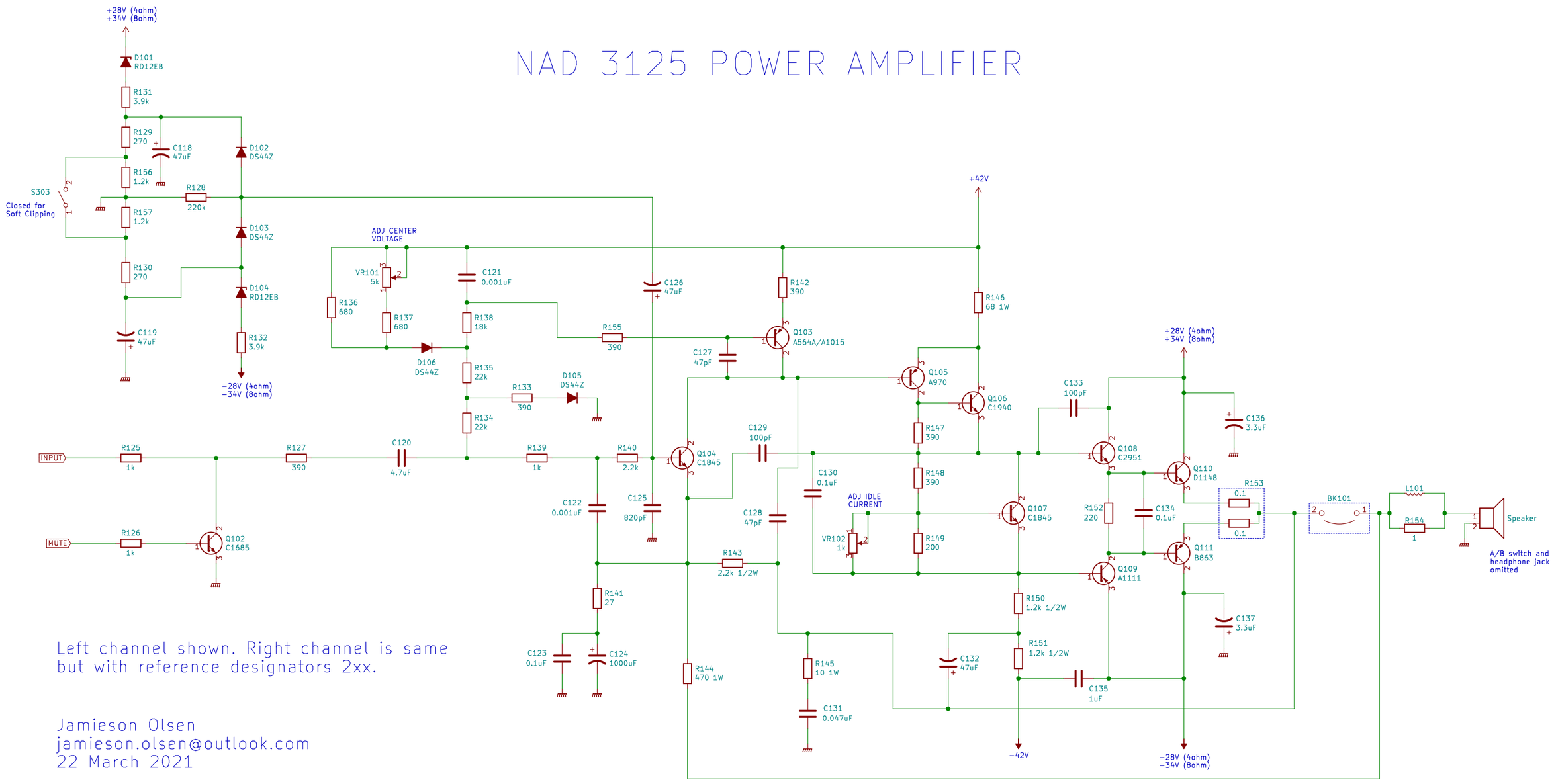

Left channel shown. Right channel is same but with reference designators 2xx.

Jamieson Olsen
jamieson.olsen@outlook.com

22 March 2021