SCHEMATIC DIAGRAM NAD3020i AMPLIFIER

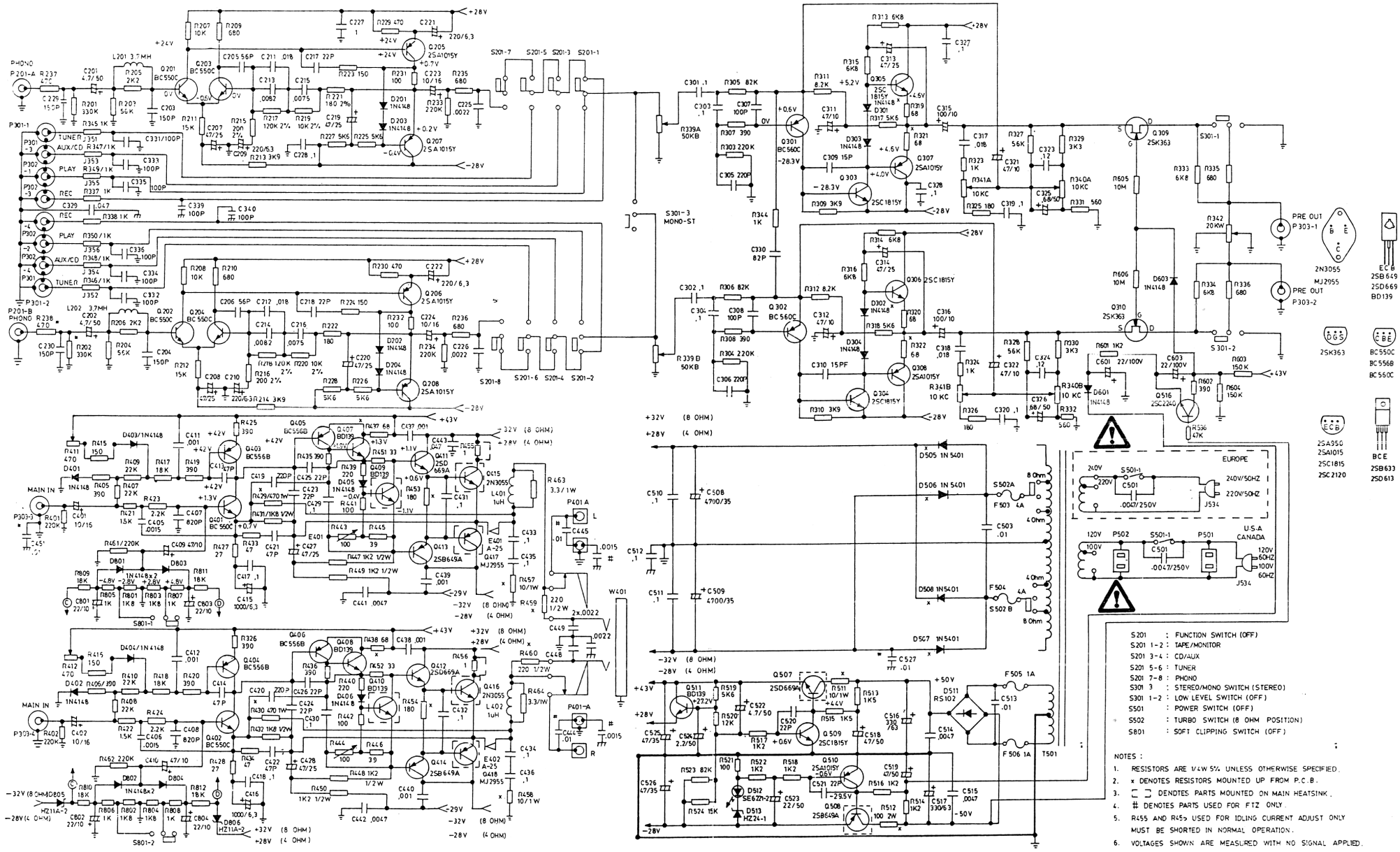

S201 : FUNCTION SWITCH (OFF)
S201 1-2 : TAPE/MONITOR
S201 3-4 : CD/AUX
S201 5-6 : TUNER
S201 7-8 : PHONO
S301 3 : STEREO/MONO SWITCH (STEREO)
S301 1-2 : LOW LEVEL SWITCH (OFF)
S501 : POWER SWITCH (OFF)
S502 : TURBO SWITCH (8 OHM POSITION)
S801 : SOFT CLIPPING SWITCH (OFF)

NOTES :

1. RESISTORS ARE 1/4W 5% UNLESS OTHERWISE SPECIFIED.
2. x DENOTES RESISTORS MOUNTED UP FROM P.C.B.
3. ⊏ ⊐ DENOTES PARTS MOUNTED ON MAIN HEATSINK.
4. # DENOTES PARTS USED FOR FTZ ONLY.
5. R455 AND R459 USED FOR IDLING CURRENT ADJUST ONLY MUST BE SHORTED IN NORMAL OPERATION.
6. VOLTAGES SHOWN ARE MEASURED WITH NO SIGNAL APPLIED.