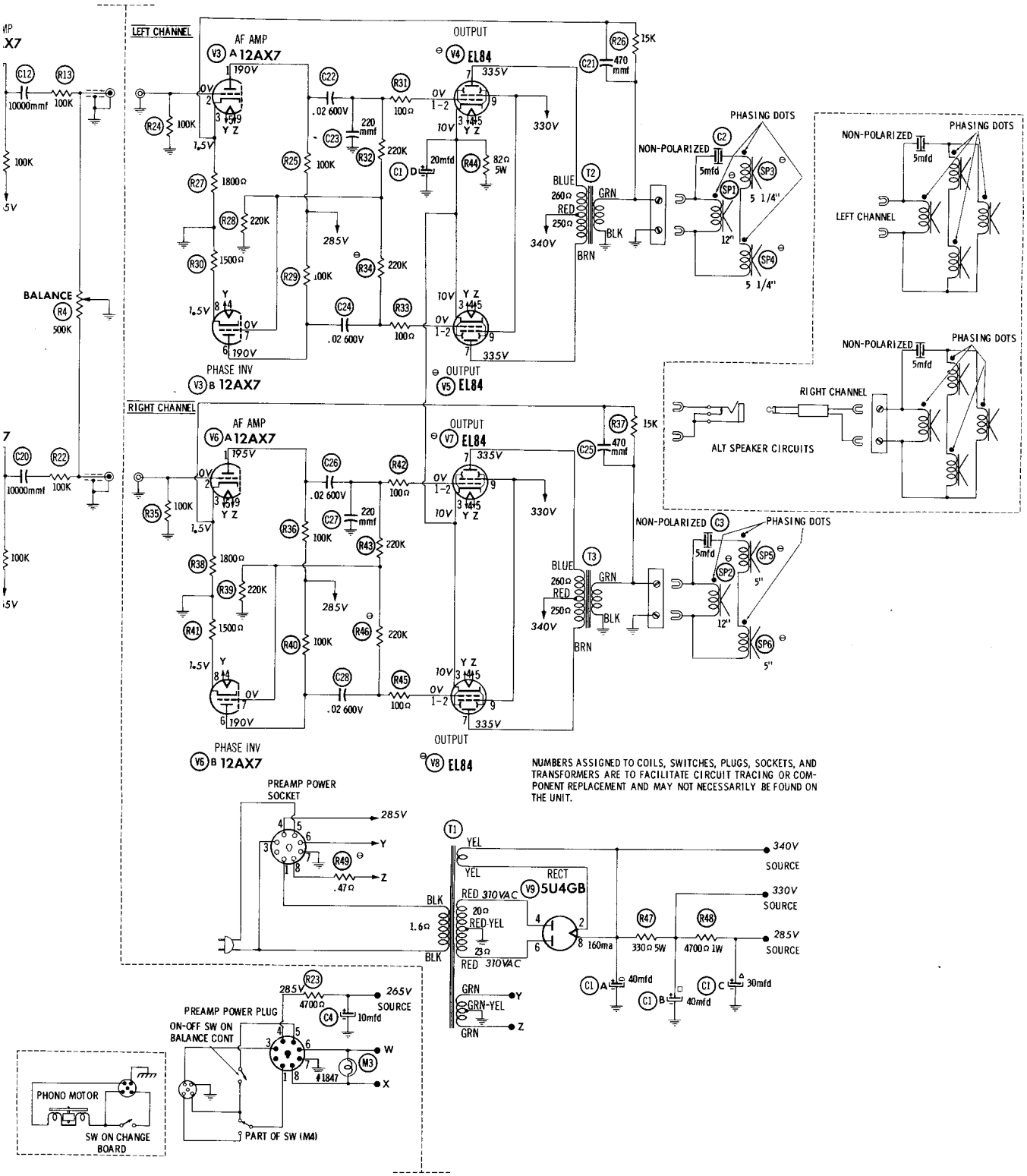

MOTOROLA MODELS 514B, CW, M, W, SK13B, M, MC, SK14B, CW, M, W (Ch. HS-696, HS-709)