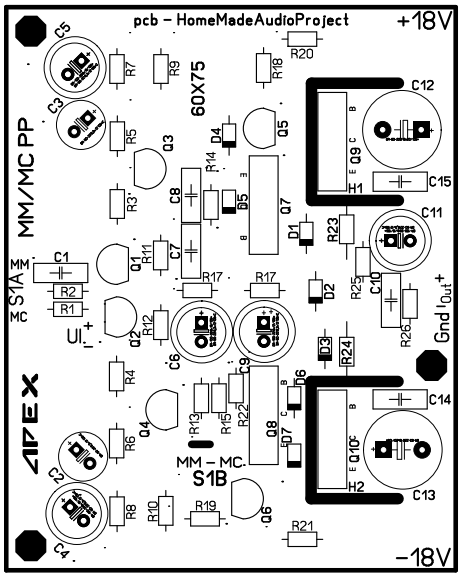
pcb – HomeMadeAudioProject
+18V
-18V
MM/MC PP
60X75
S1A
MM
MC
MM – MC.
S1B
Gnd Iout+
APEX

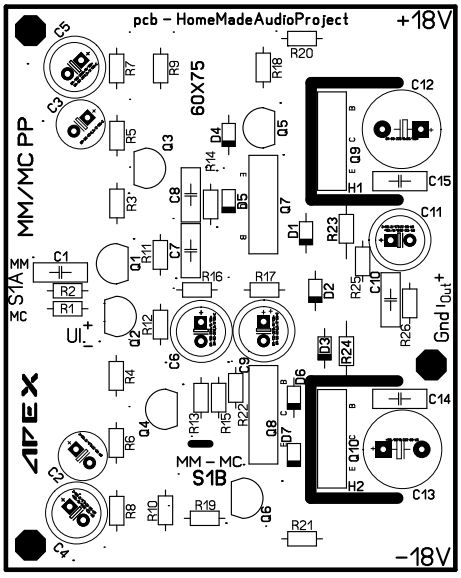
pcb – HomeMadeAudioProject
+18V
-18V
MM/MC PP
60X75
S1A
MM
MC
MM – MC.
S1B
Gnd Iout+
APEX