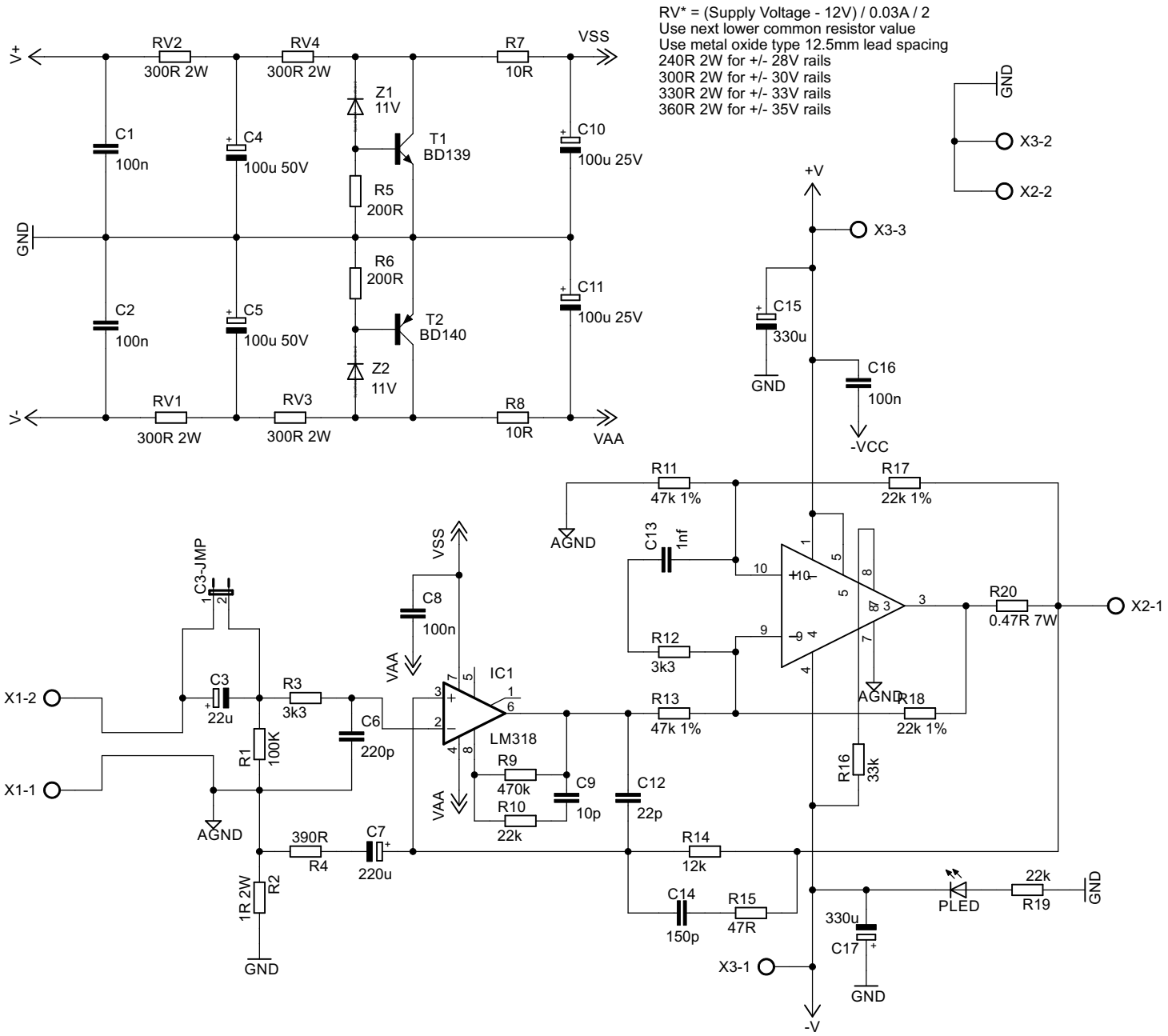
RV* = (Supply Voltage - 12V) / 0.03A / 2
Use next lower common resistor value
Use metal oxide type 12.5mm lead spacing
240R 2W for +/- 28V rails
300R 2W for +/- 30V rails
330R 2W for +/- 33V rails
360R 2W for +/- 35V rails
V+
V-
GND
VSS
VAA
RV1 300R 2W
RV2 300R 2W
RV3 300R 2W
RV4 300R 2W
R7 10R
R8 10R
C1 100n
C2 100n
C4 100u 50V
C5 100u 50V
C10 100u 25V
C11 100u 25V
Z1 11V
Z2 11V
R5 200R
R6 200R
T1 BD139
T2 BD140
X3-2
X2-2
X3-3
+V
-V
-VCC
C15 330u
C16 100n
C17 330u
R11 47k 1%
R17 22k 1%
R12 3k3
R13 47k 1%
R14 12k
R15 47R
R16 33k
R18 22k 1%
R19 22k
R20 0.47R 7W
C13 1nf
C14 150p
C12 22p
PLED
X2-1
X3-1
AGND
C3-JMP
X1-2
X1-1
C3 22u
R3 3k3
R1 100K
C6 220p
C8 100n
IC1
LM318
R9 470k
R10 22k
C9 10p
390R R4
C7 220u
1R 2W R2