Electro-Voice®

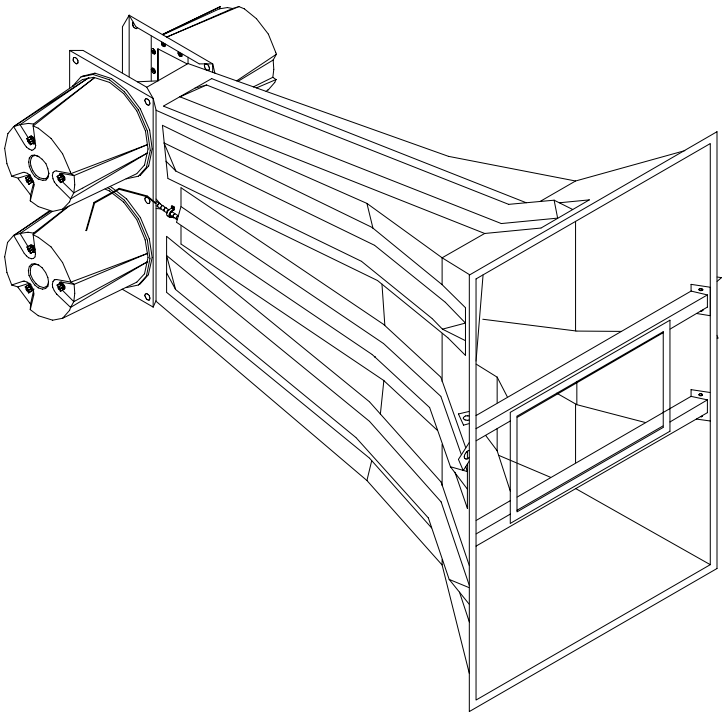

MH4020AC

Coaxial Stadium Horn System

- **Constant-Directivity Manifold Technology® Horn system with 40° X 20° coverage pattern**
- **Ring-Mode Decoupling (RMD™) technology for outstanding intelligibility and clarity**
- **Includes four DL10X-SH, 10 inch midrange RMD™ drivers**
- **Includes HP420A high-frequency horn and mounting bracket**
- **Use EV Neodymium or Ferrite HF drivers, single or manifolded (HF drivers sold separately)**
- **Excellent response down to 100 Hz, eliminates supplemental low frequency systems in many applications**
- **Large mouth provides high directivity at low frequencies**

Description

The Electro-Voice MH4020AC is a wide-range, 40° x 20° mid-bass/high-frequency constant-directivity horn-and-driver system utilizing Ring-Mode Decoupling (RMD™). With a contractor-installed high-frequency driver, it covers the frequency range of 100 Hz to 20,000 Hz with minimal equalization. The MH4020AC combines two pioneering concepts developed by Electro-Voice: constant-directivity horns and Manifold Technology®. The MH4020AC's potentially high acoustic output, stable directional characteristics, and extended low-frequency performance make it highly suitable for music and speech reinforcement in large indoor and outdoor venues.

At the heart of the MH4020AC are four DL10X-SH 10-inch water-resistant drivers (U.S. Patent No. 4,547,632). The driver has been specially developed for the MH series of horns. It incorporates a unique diaphragm construction of Kevlar® and epoxy.[1] This combination of high-technology materials produces a diaphragm with a strength-to-weight ratio on the order of twice that of conventional materials. Each driver is integrally mounted to the fiberglass horn bell via a heavy-duty mounting bracket and proprietary Aperiodic Enhancer™ phase plug (U.S. Patent No. 4,718,517). The Aperiodic Enhancer™ is responsible for the extended high-frequency response of the MH4020AC's mid-band section. It makes use of the fact that only the apex of the cone (near the voice coil) is in motion at higher frequencies, and automatically adjusts the acoustic loading to maximize acoustic output.

Manifolding allows the output of two or more drivers to be summed without the usual detrimental interference problems in the pass-band. There are a number of additional advantages to manifolding, including reduced distortion (see Figure 5) and increased efficiency at certain frequencies. There is also redundancy built into the system; in the unlikely event of a driver failure, one remains available. The DLX10-SH drivers are contained and sealed within fiberglass covers optimally tuned for maximum low-end perfomance and displacement control.

The frequencies above 1,600 Hz are handled by the Electro-Voice HP420A constant-directivity horn, in combination with a contractor-selected and installed high-frequency compression driver.

1. Kevlar is a registered trademark of DuPont

Ring-Mode Decoupling (RMD™)

The MH4020AC controls both acoustical and mechanical ring modes to provide dramatically increased intelligibility, using techniques learned from the development of the Electro-Voice X-Array™ concert speakers. There is much less coloration of the sound from resonating sources, leaving only the intended sound to be heard by the audience.

Installation

Suspending any object is potentially dangerous and should only be attempted by individuals who have a thorough knowledge of the techniques and regulations of rigging items overhead. Electro-Voice strongly recommends that the MH4020AC be suspended in accordance with all current national, federal, state and local regulations. It is the responsibility of the installer to ensure that the MH4020AC is safely installed in accordance with all such regulations.

The MH4020AC is designed to be suspended safely and easily. The integral mounting brackets at the rear should be used as the main structural hanging location. There are also two structural hanging locations on the

rear of the front flange to aim and stabilize the device. Electro-Voice recommends that each MH4020AC be independently supported. The MH4020AC can be easily suspended with either the 40° or the 20° coverage pattern horizontal. Note: the contractor-selected high-frequency drivers contribute to the overall weight of the MH4020AC. In the worst case (DH2A/4MT) an additional 48 lb is added. This should be taken into consideration when suspending the system.

Electrical connections can be made using standard electrical boxes or weather-resistant boxes if used in adverse conditions. The mounting brackets incorporate a predrilled flange to aid electrical box mounting.

If the MH4020AC is suspended, it is recommended that the unit be inspected at least once a year. If any sign of weakness is detected, remedial action should be taken immediately.

Equalization and Subpassband Protection

The MH4020AC's mid-bass section exhibits typical constant-directivity horn characteristics, i.e., roll-off at the frequency extremes. At higher frequencies, the roll-off approximately matches the power-response of the DL10X-SH (6 dB per octave). At lower frequencies, directivity is lost when the mouth is no longer large enough to maintain directional control. These two consequences can be observed in the "humped" response in Figure 3. Equalization can be easily applied with a graphic equalizer to give a flat response.

The high-frequency compression driver can be equalized with a graphic equalizer or an EQ module inserted into the Electro-Voice XEQ-2 (two-way) or XEQ-3 (two-way or three-way) active crossover/equalizer. The EQ module should be selected to suit the particular compression driver and the HP420A horn (see relevant data sheet). Because of its use in large arenas, where air loss can be significant, it is recommended that the system be equalized "on site" for optimum results. The XEQ-3 and the mid-bass EQ module from the EQMT-2 can be used to provide a good starting point for the equalization.

Electro-Voice strongly recommends the use of a 100-Hz high-pass filter to protect the drivers from unnecessary excursion and thermal stress.

Connections

The four DL10X-SH drivers in the MH4020AC horn have a nominal impedance of 16 ohms each and can be accessed individually and driven independently. However, it is more typical to combine the drivers. Figure 9 illustrates some different combinations. It is particularly important to bear in mind the impedance of any cabling and specifications of the amplifier before selecting a specific combination. Whatever the combination selected, the polarity of the drivers must be considered (see Figure 9 and Polarity of the DL10X-SH Drivers section).

Directivity

The axial directivity factor R_θ of the MH4020AC was computed at each of the one-third-octave center frequencies over the frequency range noted from the horizontal/vertical polars shown in Figure 7. Directivity index (D_i) was taken over the same frequency range.

Beamwidth

Plots of the MH4020AC's 6-dB-down total included beamwidth angles are shown in Figure 6 for each of the one-third-octave center frequencies noted.

Polar Response

The directional characteristics of the MH4020AC were obtained by selecting the horizontal and vertical details from a full set of polar data measured in EV's large anechoic chamber. The measurement microphone was placed 6.1 m (20 ft) from the center of rotation of the horn which, in turn, was 0.94 m (3.08 ft) behind the mouth of the horn. See Figure 8.

Polarity of the DL10X-SH Drivers

For Manifold Technology® to operate correctly, the drivers must be operated "in phase." In other words, for parallel connection, the DL10X-SH's must be connected so the negative terminals of the drivers are connected together, and the positive terminals are connected together.

Service

In the unlikely event the MH4020AC requires service, each DL10X-SH easily can be replaced or serviced by removing the back cover and then removing the driver. A service data sheet is available from Electro-Voice.

Power Handling Capacity

To our knowledge, Electro-Voice was the first U.S. manufacturer to develop and publish a power test closely related to real-life conditions. A random-noise input signal is used because it contains many frequencies simultaneously, just like real voice or instrument program. The signal contains more energy at extremely high and low frequencies than typical actual program, adding an extra margin of reliability. The test combines not only the overall "long-term average" or "continuous" level—which our ears interpret as loudness—but also short-duration peaks which are many times higher than average, just like actual program. The long-term average level stresses the speaker thermally (heat). The instantaneous peaks test mechanical reliability (cone excursion). Note that the sine-wave test signals sometimes used have a much less demanding peak value relative to their average level. In actual use, long-term average levels exist from several seconds on up. The test performed lasts for eight hours, adding another extra level of confidence.

Specifically, the MH4020AC mid-band section is designed to withstand the power test described in EIA Standard RS-426A. The EIA test spectrum is applied for eight hours. The spectrum is obtained by filtering white noise (a particular type of random noise with equal energy per bandwidth). The filter applies 6-dB-per-octave slopes below 40 Hz and above 318 Hz. When measured with a one-third-octave constant-percentage analyzer, this filter produces a spectrum whose 3-dB-down points are at 100 Hz and 1,200 Hz with a 3-dB-per-octave slope above 1,200 Hz. This shaped signal

is then further filtered with an 80-Hz, 12-dB-per-octave high-pass filter to prevent out-of-passband displacement. The amplifier is set to provide 1,200 watts into the 6.9-ohm EIA equivalent impedance (91.0 volts). Amplifier clipping sets instantaneous peaks at 6 dB above the continuous power or 4,800 watts peak (182.0 volts). During this test, the mid-band section is not high passed at 1,600 Hz. The high-frequency section's power handling is dependent on the selected driver combination. Please refer to the relevant engineering data sheet.

Architects' and Engineers' Specifications

The horn shall be of the constant-directivity type. It shall produce a horizontal beamwidth (6-dB-down angle) of 40°, deviating no more than +20°/–5° from this angle over the range of 350 Hz to 20 kHz. It shall produce a vertical beamwidth of 20°, deviating no more than +30°/–5°over the frequency range of 350 Hz to 20 kHz. In addition, it shall provide an acoustic load to below 100 Hz.

The MH4020AC mid-bass section shall operate over the range of 100 Hz to 4,000 Hz, with a recommended crossover frequency of 1,600 Hz, and be driven by four 10-inch, weather-resistant drivers with high-technology cones of Kevlar® and epoxy.[1] The patented Manifold Technology® technique shall be exploited and result in a power-handling capacity of 1,200 watts per EIA Standard RS-426A. The average axial sensitivity shall be 109 dB SPL at 1 meter with 2.83 volts applied. The frequencies above 1,600 Hz shall be produced by the supplied Electro-Voice HP420A TransPlanar™ constant-directivity horn with user-selectable driver combinations.

The horn bell manifold chamber and back covers shall be constructed of fiberglass, foam and polyester resin. Two steel mounting rails shall be provided to coaxially mount the Electro-Voice HP420A horn. The horn shall have an integral rear mounting bracket made of black powder-coated 10-gauge steel. Brackets shall be provided at the front of the horn to stabilize and aim the MH4020AC.

The horn shall be 1500 mm (59.0 in.) high, 991 mm (39.0 in.) wide, 1880 mm (80.0 in.) long and weigh 108 kg (237 lb).

The horn shall be the Electro-Voice MH4020AC coaxial constant-directivity Manifold Technology® horn.

Limited Warranty

Electro-Voice products are guaranteed against malfunction due to defects in materials or workmanship for a specified period, as noted in the individual product-line statement(s) below, or in the individual product data sheet or owner's manual, beginning with the date of original purchase. If such malfunction occurs during the specified period, the product will be repaired or replaced (at our option) without charge. The product will be returned to the customer prepaid. **Exclusions and Limitations:** The Limited Warranty does not apply to: (a) exterior finish or appearance; (b) certain specific items described in the individual product-line statement(s) below, or in the individual product data sheet or owner's manual; (c) malfunction resulting from use or operation of the product other than as specified in the product data sheet or owner's manual; (d) malfunction resulting from misuse or abuse of the product; or (e) malfunction occurring at any time after repairs have been made to the product by anyone other than Electro-Voice Service or any of its authorized service representatives. **Obtaining Warranty Service:** To obtain warranty service, a customer must deliver the product, prepaid, to Electro-Voice Service or any of its authorized service representatives together with proof of purchase of the product in the form of a bill of sale or receipted invoice. A list of authorized service representatives is available from Electro-Voice Service at 600 Cecil Street, Buchanan, MI 49107 (800/234-6831 or FAX 616/695-4743). **Incidental and Consequential Damages Excluded:** Product repair or replacement and return to the customer are the only remedies provided to the customer. Electro-Voice shall not be liable for any incidental or consequential damages including, without limitation, injury to persons or property or loss of use. Some states do not allow the exclusion or limitation of incidental or consequential damages so the above limitation or exclusion may not apply to you. **Other Rights:** This warranty gives you specific legal rights, and you may also have other rights which vary from state to state.

Electro-Voice Speakers and Speaker Systems are guaranteed against malfunction due to defects in materials or workmanship for a period of five (5) years from the date of original purchase. The Limited Warranty does not apply to burned voice coils or malfunctions such as cone and/or coil damage resulting from improperly designed enclosures. Electro-Voice active electronics associated with the speaker systems are guaranteed for three (3) years from the date of original purchase. Additional details are included in the Uniform Limited Warranty statement.

For warranty repair or service information, contact the service repair department at: 616/695-6831 or 800/685-2606.

For technical assistance, contact Technical Support at 800/234-6831 or 616/695-6831, M-F, 8:00 a.m. to 5:00 p.m. Eastern Standard Time.

Specifications subject to change without notice.

Figure 1—Polar Response

HORIZONTAL
VERTICAL
5 dB per division

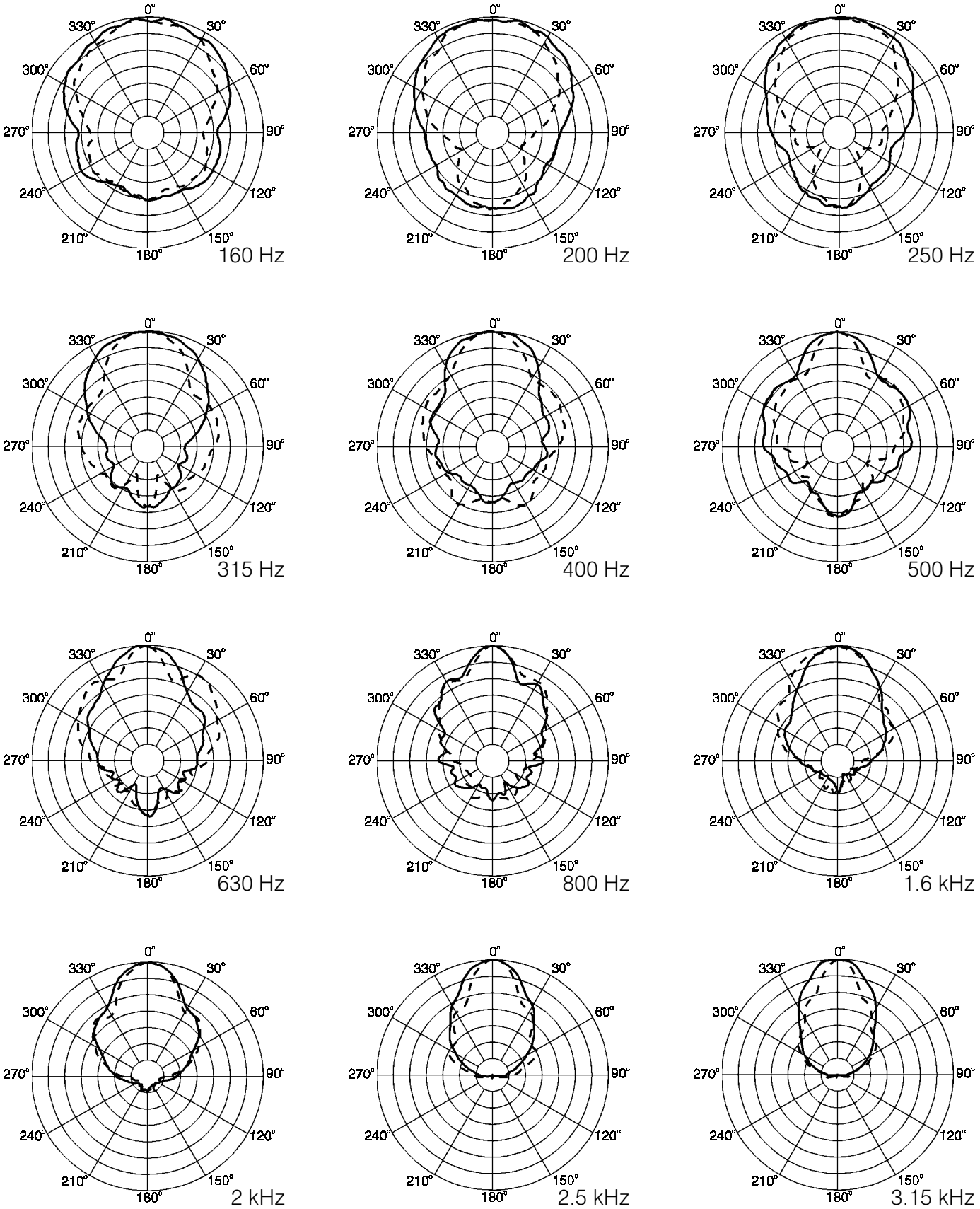

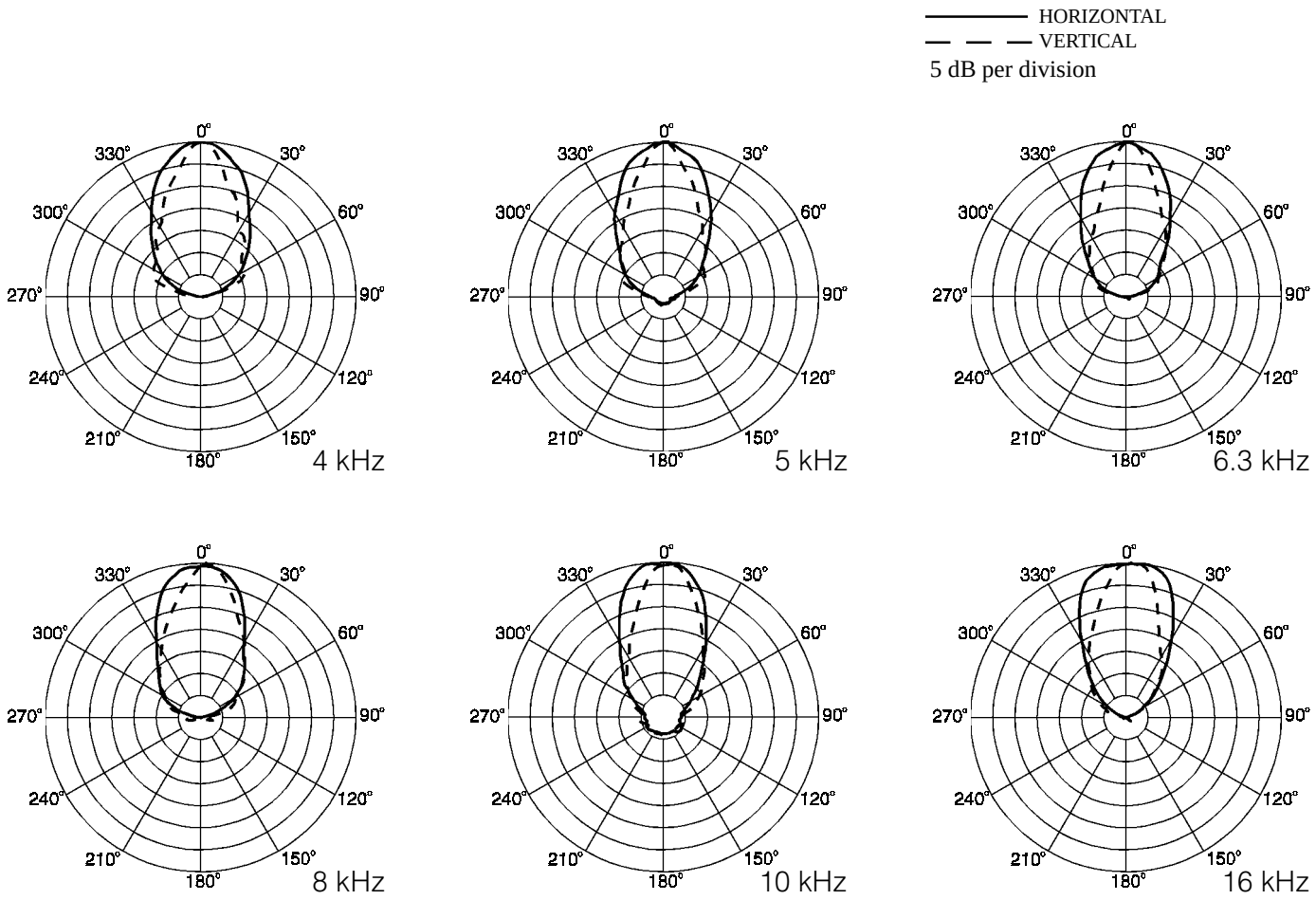

Figure 2—Axial Frequency Response (1,600-Hz crossover, 2.96-ms delay, with broadband equalization)

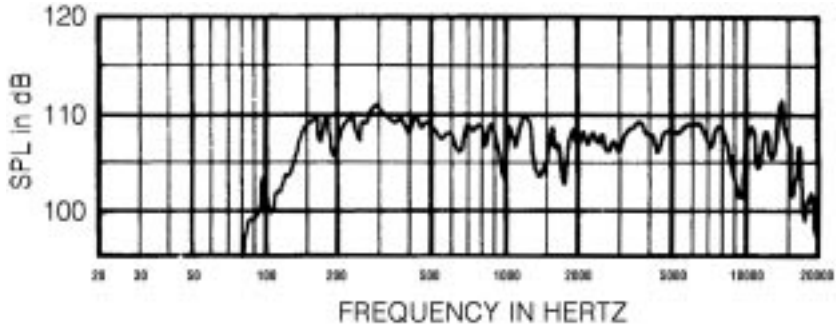

Figure 3—Axial Frequency Response Mid-Band Section only (1 watt/1 meter)

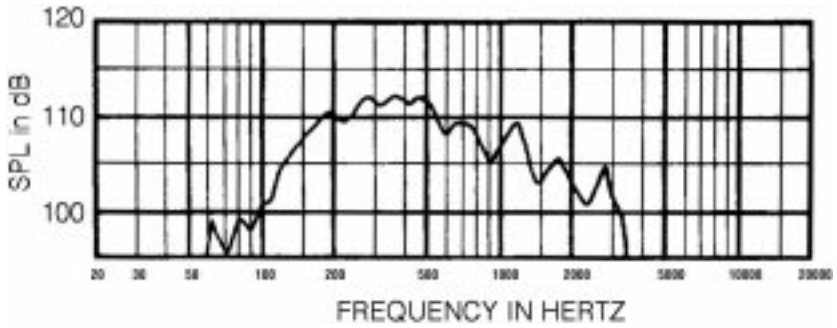

MH4020AC Coaxial Stadium Horn System

MH4020AC Coaxial Stadium Horn System

Figure 4—Impedance Response (one paralleled pair of drivers)

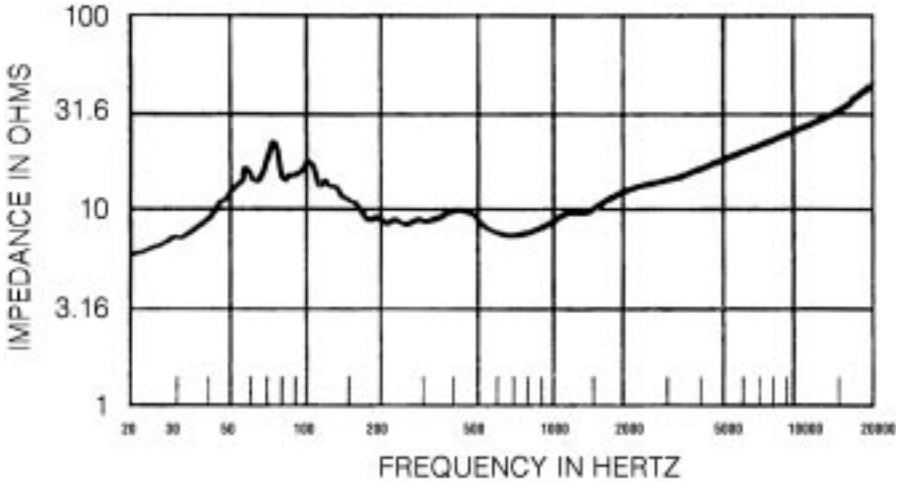

Figure 5—Distortion Response, 10% Power

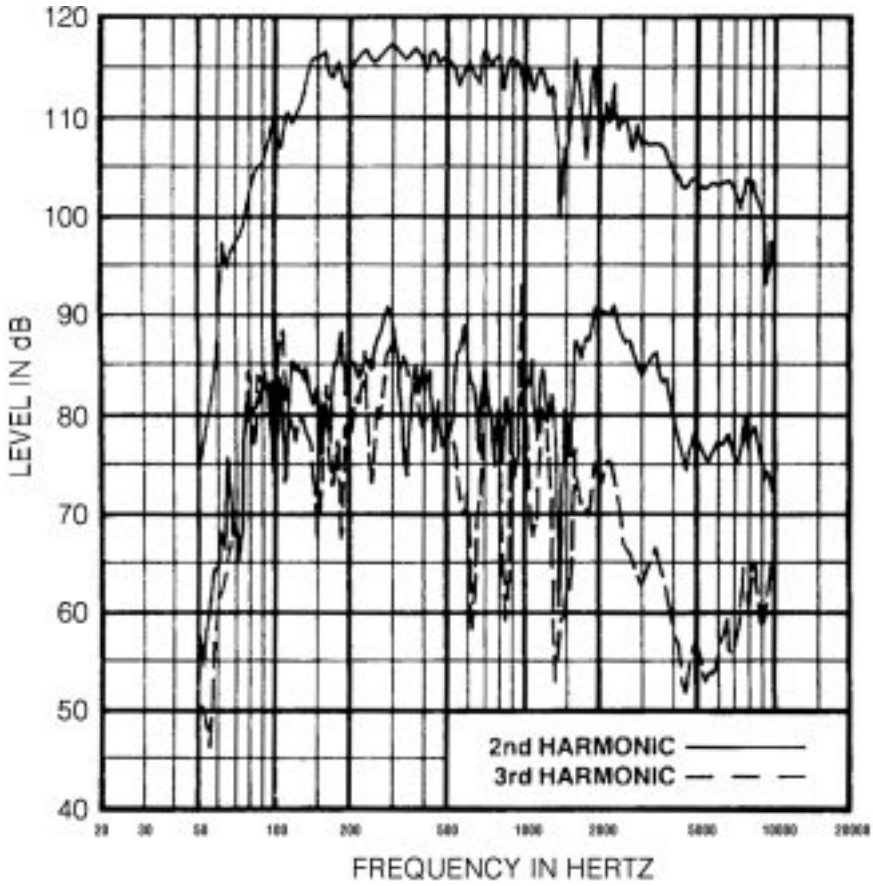

Figure 6—Beamwidth Response

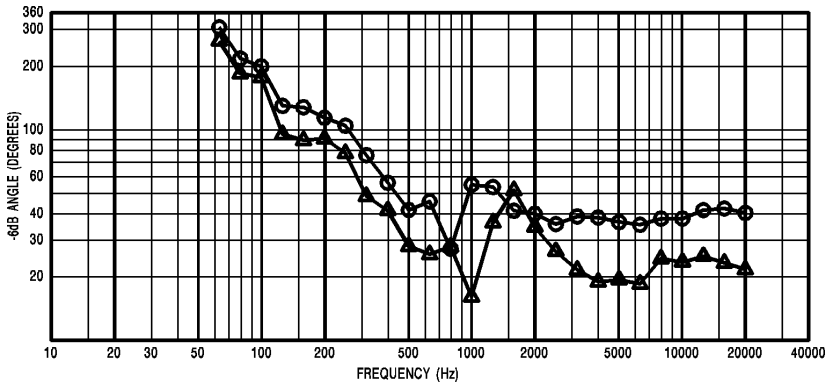

Figure 7—Directivity Response

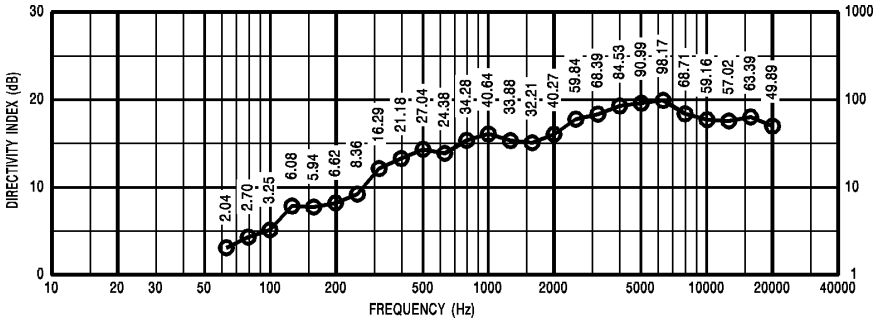

Figure 8—Dimensions

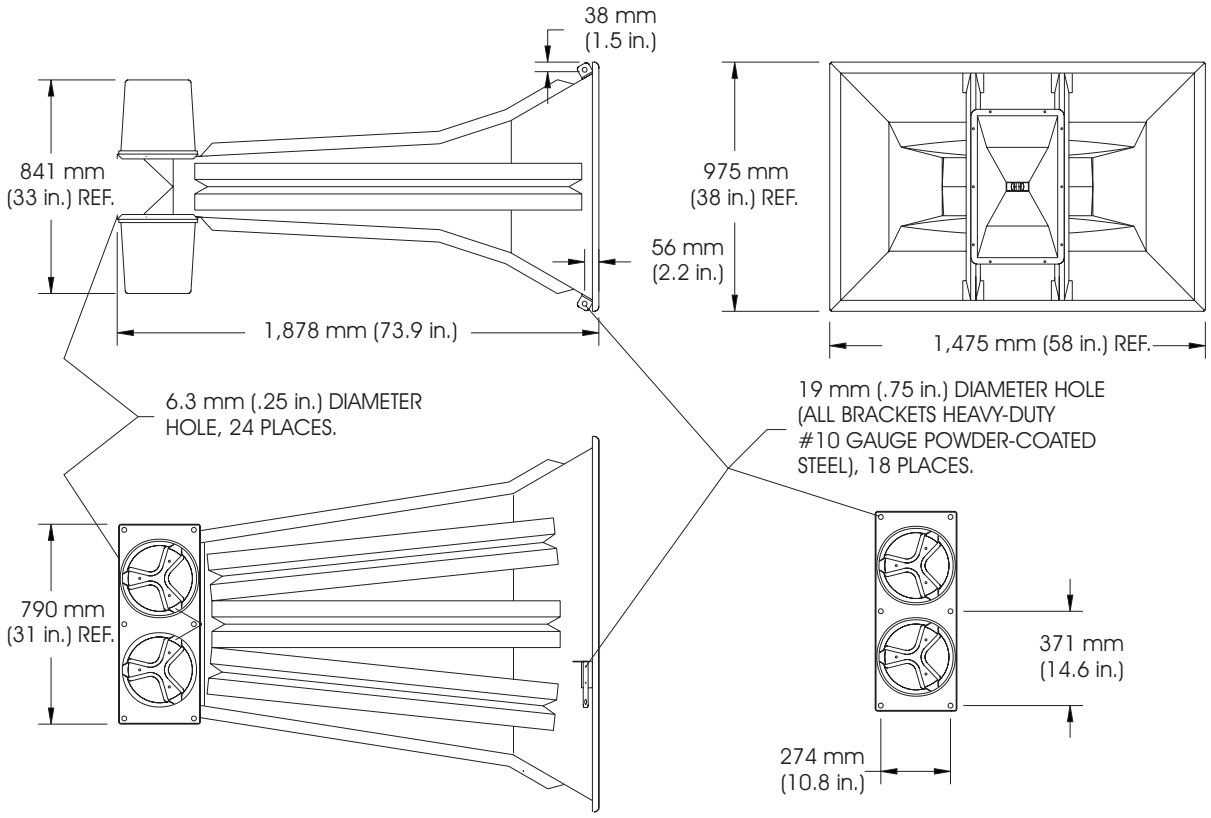

Figure 9—Wiring Diagram

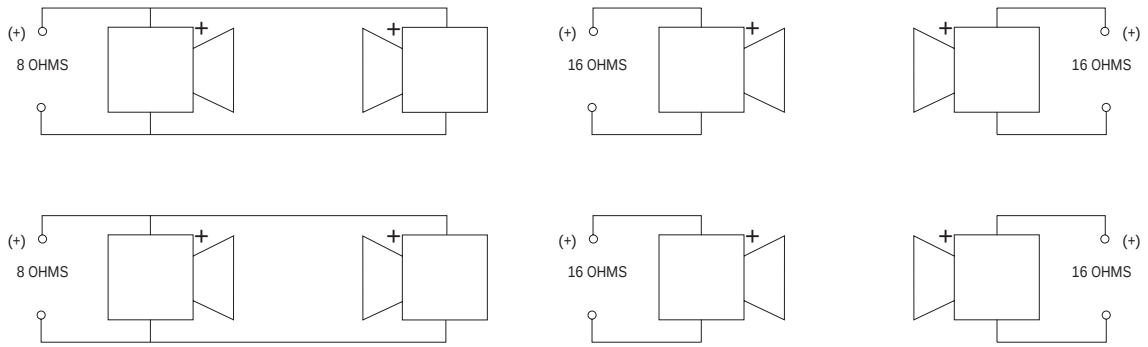

MH4020AC Coaxial Stadium Horn System

MH4020AC Coaxial Stadium Horn System

Specifications*

Useable frequency Range:
Coaxial Version (See figure 2)
100-20,000 Hz
Non Coaxial Version (figure 3)
100-4,000 Hz
Power Handling, long-term average broadband per EIA RS-426A, (see page 2 for complete test description):
1200 watts
Sensitivity (Sound Pressure Level @ 1 Meter, 2.83 Volts input,band limited pink noise in anechoic environment):
109 dB
Average Efficiency:
25%
Nominal Coverage Angle (See figure 6),
Vertical:
40°
Horizontal:
20°
Mid-bass Transducers,
Configuration:
4-way manifold
Transducer Complement:
DL10X-SH (4), with water-resistant cones and Ring-Mode Decoupling (RMD™)
Nominal Impedance in pass band (See figure 4):
8 Ohms/ parallel pair
D.C. Resistance:
6.2 Ohms/ each driver
3.1 Ohms/ parallel pair
Available High-Frequency Transducer Options For HP420A Horn (Contractor-selected and installed, purchased separately)
Single Driver:
DH1A, DH2A, N/DYM1, ND5/2
Manifold Drivers:
DH2A/MT, N/DYM1/MT
Manifolded Driver systems:
DH1A/2MT
Construction,
Mid-bass horn:
One-piece black polyester and fiberglass with fiberglass rib reinforcement.
High-Frequency Horn:
A special coaxial version of the HP420A equipped with resonance decoupling vents, supplied mounted on two steel rails
Mid-bass Mechanical Protection:
Integral grille-protection screen built into manifold chamber
Electrical Connections
Driver Input Connections:
Heavy-duty 12-AWG oxygen free copper cable, unterminated, exterior grade UV-Stabilized Flexible conduit
Driver Polarity:
A positive voltage applied to the positive leads produces a positive acoustic pressure.
Recommended High Frequency Crossover Frequency:
1600 Hz
Slope:
24 dB per octave
HF delay:
2.96ms+/-0.3 ms
Mounting,
Hanging Hardware:
Integral black 10-gauge polyester powder coated steal.
Physical Specifications,
Height:
1500 mm (50.0 in)
Width:
991 mm (39.0 in)
Length:
1880 mm (73.9 in)
Packed Length:
2030 mm (80.0 in)
Weight:
108 kg (237 lb.)
Shipping Weight:
113 kg (248 lb.)
Packing:
Wooden pallet

* Specifications meet or exceed AES Recommended Practice for Specifications of Loudspeaker Components Used in Professional Audio and Sound Reinforcement Systems (AES2-1984; ANSI S4.26-1984)

Electro-Voice®
600 Cecil Street, Buchanan, MI 49107
800/234-6831, 616/695-6831, 616/695-1304 Fax

©Telex Communications, Inc. 1998 • Litho in U.S.A.
Part Number 534919 — 9817