| REVISION RECORD | | | |
|---|---|---|---|
| LTR | ECO NO: | APPROVED: | DATE: |
| | 206-0210-a3 | | 5/5/04 |
| | | | |
| | | | |
| | | | |

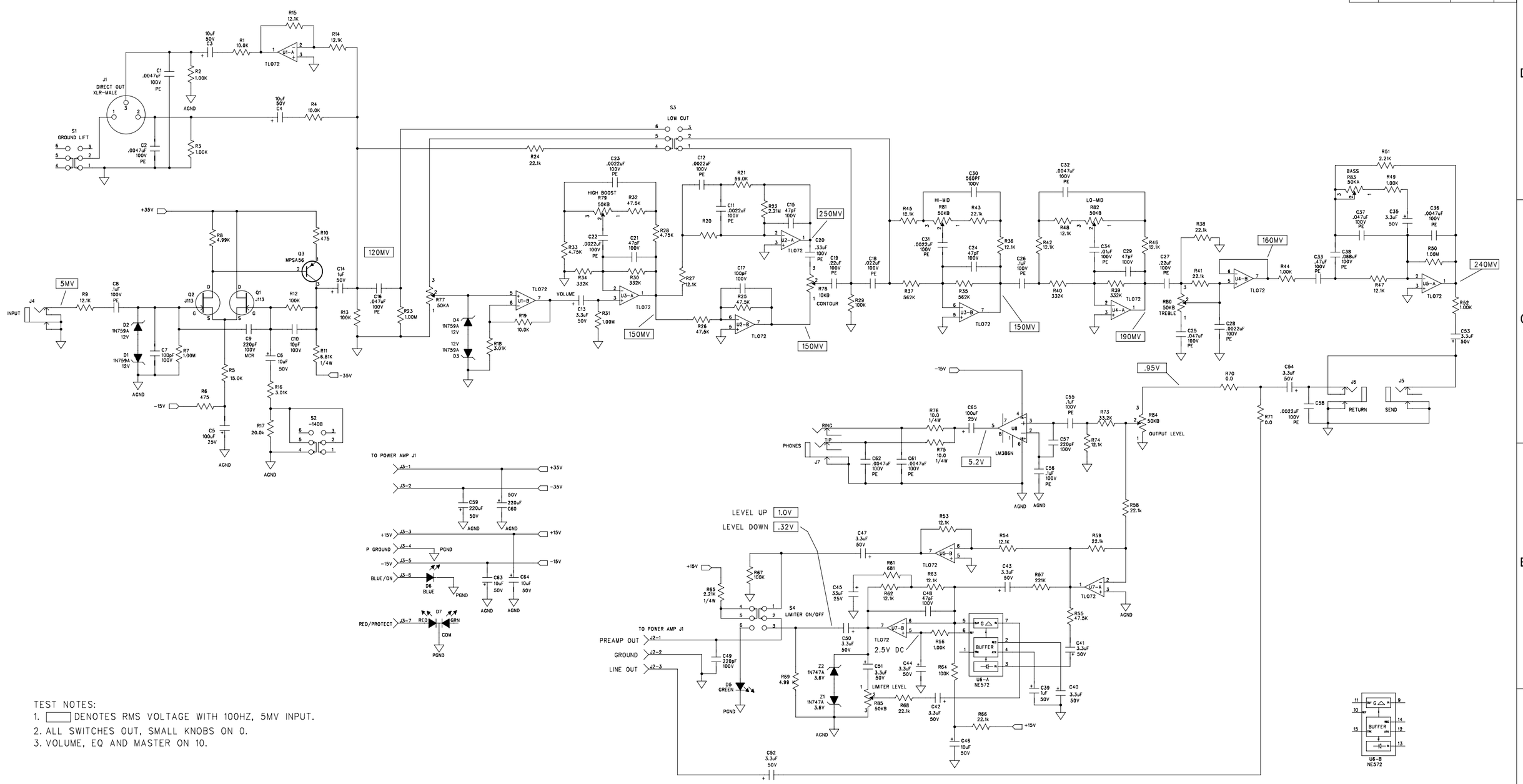


TEST NOTES:
1. [ ] DENOTES RMS VOLTAGE WITH 100HZ, 5MV INPUT.
2. ALL SWITCHES OUT, SMALL KNOBS ON 0.
3. VOLUME, EQ AND MASTER ON 10.

NOT VALID UNLESS STAMP IS RED

gallien technology
2234 INDUSTRIAL DRIVE
STOCKTON, CA, 95206
RELEASE FOR MANUFACTURE
BY: _____ DATE: 5/14/08
not valid if unsigned

gallien technology
2240 PARAGON DRIVE
SAN JOSE CA. 95131
VOICE: 408-441-8081
FAX: 408-441-8085

1. CHANGE R1 & R4 FROM 1K TO 10K.
2. CHANGE R2 & R3 FROM 100K TO 1K.

| APPROVALS | INIT | DATE |
|---|---|---|
| DESIGNED: | R.A.G. | 3/21/01 |
| DRAWN: | R.A.G. | 8/21/03 |
| ELEC: | | |
| MOD BY: | NOLI | 4/15/08 |
| Q/A: | | |
| RELEASED: | | |

TITLE: MB150S-III PREAMP
SIZE: B
DRAWING NO: 406-0210-B1
PART NO: 206-0210-B1
REV. B1
COMPANY: GALLIEN-KRUEGER
FILENAME: 6210B1.sch