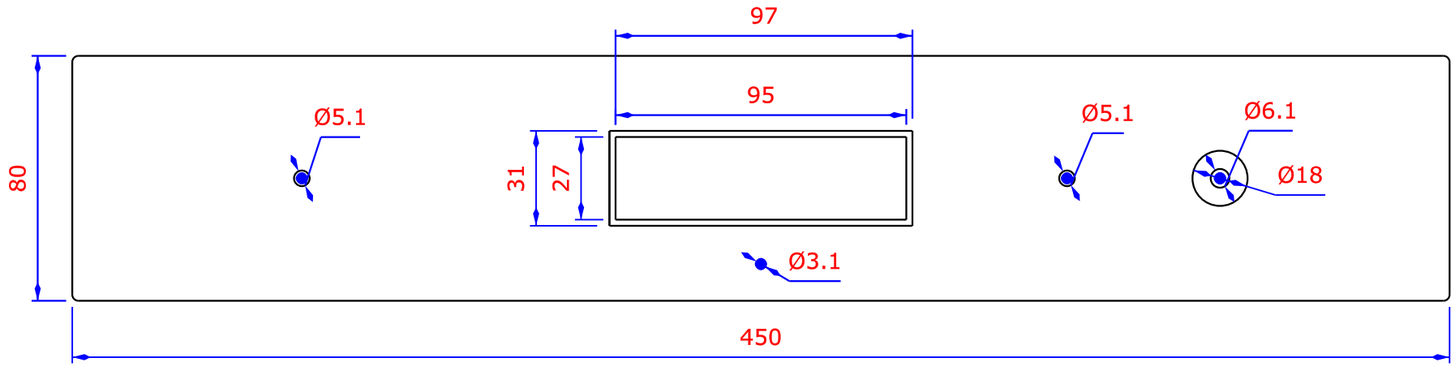

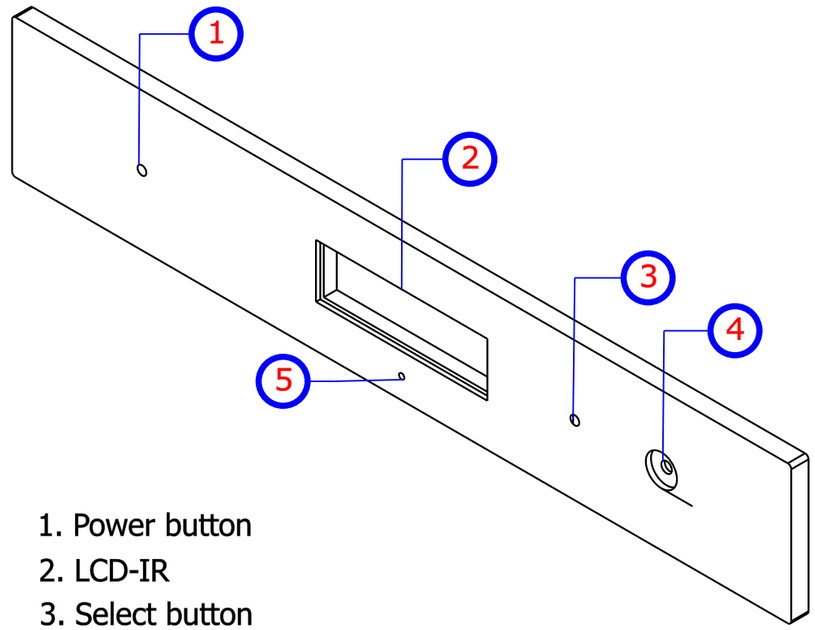

1. Power button
2. LCD-IR
3. Select button
4. Encoder
5. LED (power)

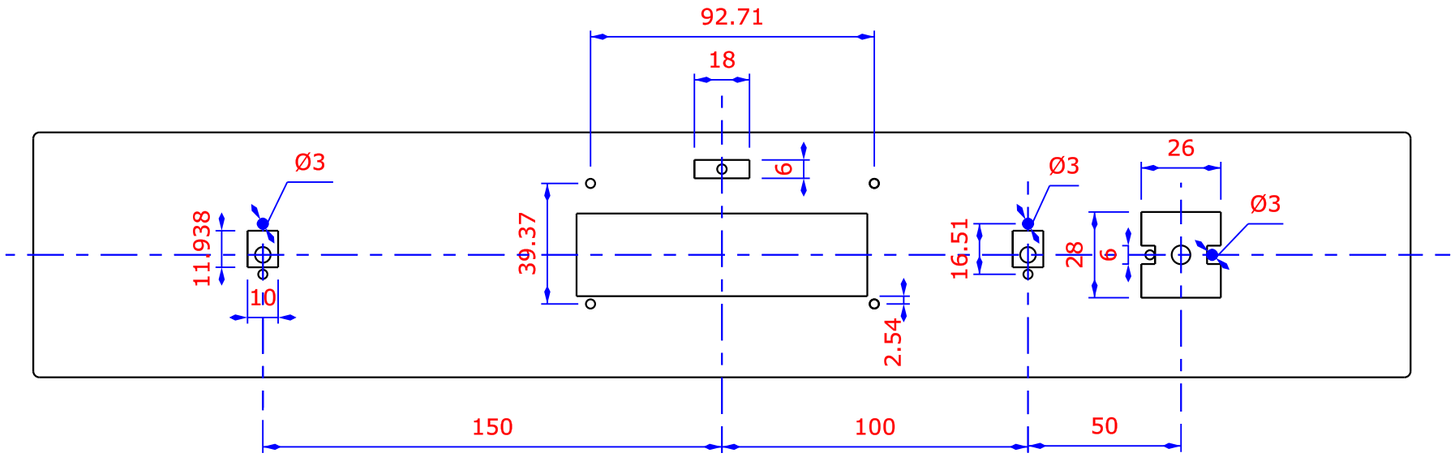

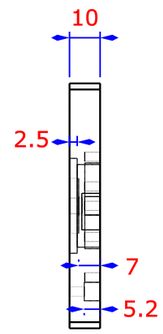

Created by: JazzCreative	Title: MAYA front panel			
Supplementary information: This drawing and design are the exclusive property of VICOL AUDIO. Shall not be copied or communicated in any form without prior authorization from VICOL AUDIO	Size: A3	Sheet: 1 / 1	Scale: 0.5	
	Part number: FRONT PANEL			
	Drawing number: MA001			
	Date: 2015-09-03		Revision: A	