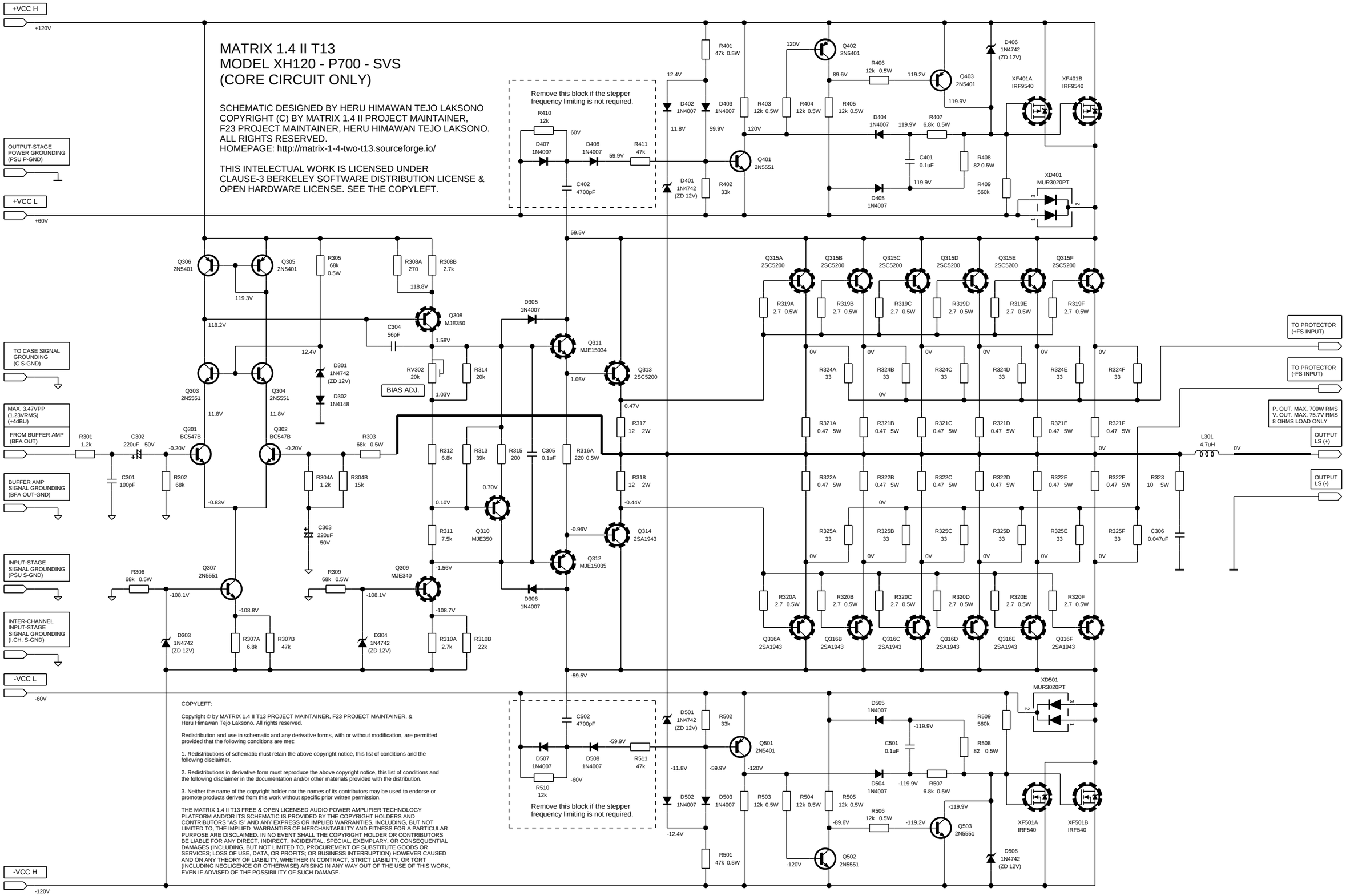
MATRIX 1.4 II T13
MODEL XH120 - P700 - SVS
(CORE CIRCUIT ONLY)
SCHEMATIC DESIGNED BY HERU HIMAWAN TEJO LAKSONO
COPYRIGHT (C) BY MATRIX 1.4 II PROJECT MAINTAINER,
F23 PROJECT MAINTAINER, HERU HIMAWAN TEJO LAKSONO.
ALL RIGHTS RESERVED.
HOMEPAGE: http://matrix-1-4-two-t13.sourceforge.io/
THIS INTELECTUAL WORK IS LICENSED UNDER
CLAUSE-3 BERKELEY SOFTWARE DISTRIBUTION LICENSE &
OPEN HARDWARE LICENSE. SEE THE COPYLEFT.
+VCC H
+120V
OUTPUT-STAGE POWER GROUNDING (PSU P-GND)
+VCC L
+60V
TO CASE SIGNAL GROUNDING (C S-GND)
MAX. 3.47VPP (1.23VRMS) (+4dBU)
FROM BUFFER AMP (BFA OUT)
BUFFER AMP SIGNAL GROUNDING (BFA OUT-GND)
INPUT-STAGE SIGNAL GROUNDING (PSU S-GND)
INTER-CHANNEL INPUT-STAGE SIGNAL GROUNDING (I.CH. S-GND)
-VCC L
-60V
-VCC H
-120V
TO PROTECTOR (+FS INPUT)
TO PROTECTOR (-FS INPUT)
P. OUT. MAX. 700W RMS
V. OUT. MAX. 75.7V RMS
8 OHMS LOAD ONLY
OUTPUT LS (+)
OUTPUT LS (-)
Remove this block if the stepper frequency limiting is not required.
BIAS ADJ.
Q306 2N5401
Q305 2N5401
Q303 2N5551
Q304 2N5551
Q301 BC547B
Q302 BC547B
Q307 2N5551
Q308 MJE350
Q309 MJE340
Q310 MJE350
Q311 MJE15034
Q312 MJE15035
Q313 2SC5200
Q314 2SA1943
Q401 2N5551
Q402 2N5401
Q403 2N5401
Q501 2N5401
Q502 2N5551
Q503 2N5551
XF401A IRF9540
XF401B IRF9540
XF501A IRF540
XF501B IRF540
XD401 MUR3020PT
XD501 MUR3020PT
Q315A 2SC5200
Q315B 2SC5200
Q315C 2SC5200
Q315D 2SC5200
Q315E 2SC5200
Q315F 2SC5200
Q316A 2SA1943
Q316B 2SA1943
Q316C 2SA1943
Q316D 2SA1943
Q316E 2SA1943
Q316F 2SA1943
L301 4.7uH
COPYLEFT:
Copyright © by MATRIX 1.4 II T13 PROJECT MAINTAINER, F23 PROJECT MAINTAINER, & Heru Himawan Tejo Laksono. All rights reserved.
Redistribution and use in schematic and any derivative forms, with or without modification, are permitted provided that the following conditions are met:
1. Redistributions of schematic must retain the above copyright notice, this list of conditions and the following disclaimer.
2. Redistributions in derivative form must reproduce the above copyright notice, this list of conditions and the following disclaimer in the documentation and/or other materials provided with the distribution.
3. Neither the name of the copyright holder nor the names of its contributors may be used to endorse or promote products derived from this work without specific prior written permission.
THE MATRIX 1.4 II T13 FREE & OPEN LICENSED AUDIO POWER AMPLIFIER TECHNOLOGY PLATFORM AND/OR ITS SCHEMATIC IS PROVIDED BY THE COPYRIGHT HOLDERS AND CONTRIBUTORS "AS IS" AND ANY EXPRESS OR IMPLIED WARRANTIES, INCLUDING, BUT NOT LIMITED TO, THE IMPLIED WARRANTIES OF MERCHANTABILITY AND FITNESS FOR A PARTICULAR PURPOSE ARE DISCLAIMED. IN NO EVENT SHALL THE COPYRIGHT HOLDER OR CONTRIBUTORS BE LIABLE FOR ANY DIRECT, INDIRECT, INCIDENTAL, SPECIAL, EXEMPLARY, OR CONSEQUENTIAL DAMAGES (INCLUDING, BUT NOT LIMITED TO, PROCUREMENT OF SUBSTITUTE GOODS OR SERVICES; LOSS OF USE, DATA, OR PROFITS; OR BUSINESS INTERRUPTION) HOWEVER CAUSED AND ON ANY THEORY OF LIABILITY, WHETHER IN CONTRACT, STRICT LIABILITY, OR TORT (INCLUDING NEGLIGENCE OR OTHERWISE) ARISING IN ANY WAY OUT OF THE USE OF THIS WORK, EVEN IF ADVISED OF THE POSSIBILITY OF SUCH DAMAGE.

MATRIX 1.4 II T13 POWER AMPLIFIER TECHNOLOGY