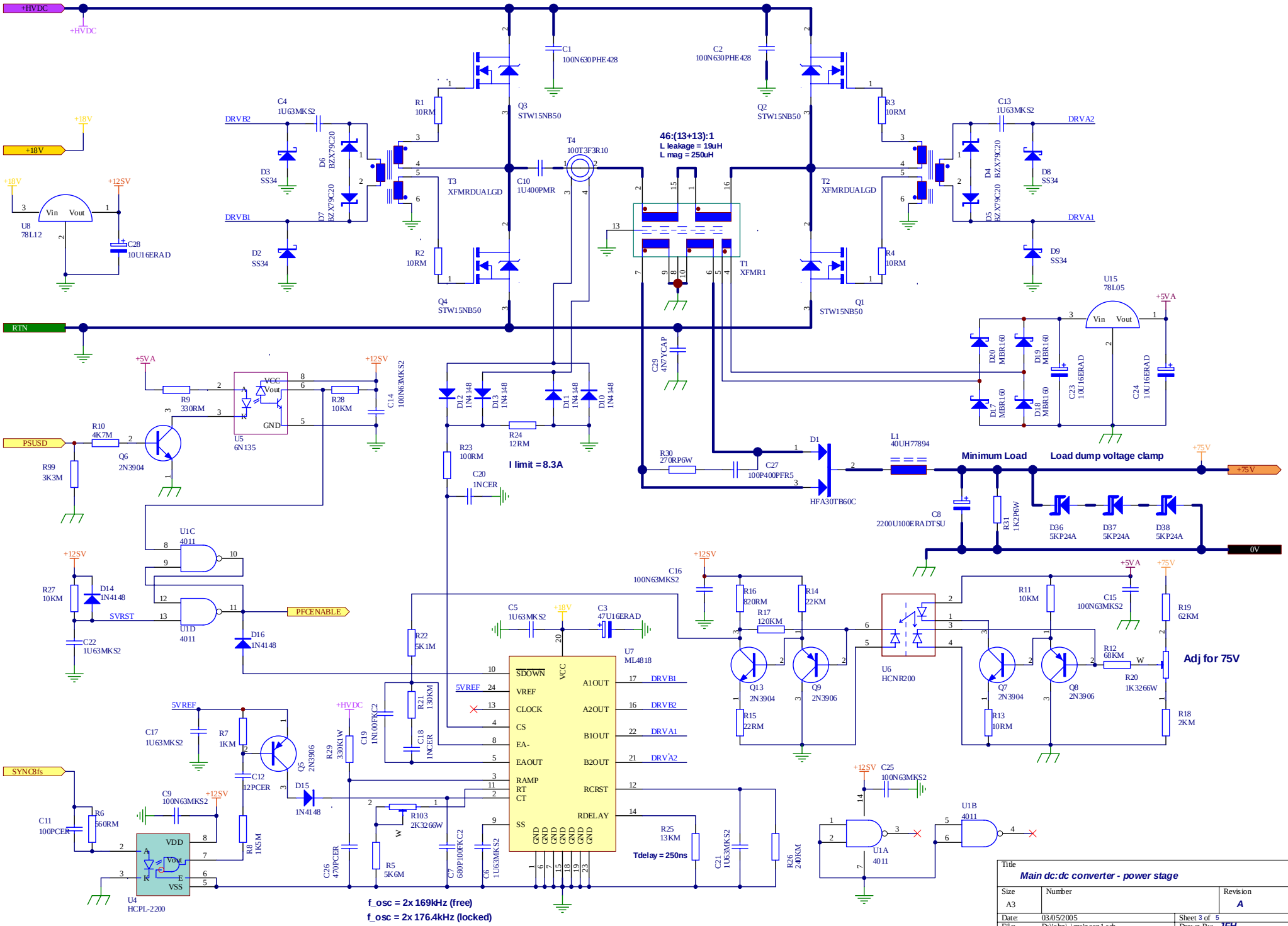
+HVDC
RTN
+18V
+12SV
+5VA
+75V
0V
PSUSD
PFCENABLE
SYNC8fs
DRVB2
DRVB1
DRVA2
DRVA1
5VREF
SVRST
46:(13+13):1
L leakage = 19uH
L mag = 250uH
I limit = 8.3A
Minimum Load
Load dump voltage clamp
Adj for 75V
Tdelay = 250ns
f_osc = 2x 169kHz (free)
f_osc = 2x 176.4kHz (locked)
Q3 STW15NB50
Q4 STW15NB50
Q2 STW15NB50
Q1 STW15NB50
T3 XFMRDUALGD
T2 XFMRDUALGD
T1 XFMR1
T4 100T3F3R10
U8 78L12
U15 78L05
U5 6N135
U4 HCPL-2200
U7 ML4818
U6 HCNR200
HFA30TB60C
Title
Main dc:dc converter - power stage
Size A3
Number
Revision A
Date: 03/05/2005
Sheet 3 of 5
File: D:\john\..\maincon1.sch
Drawn By: JFH