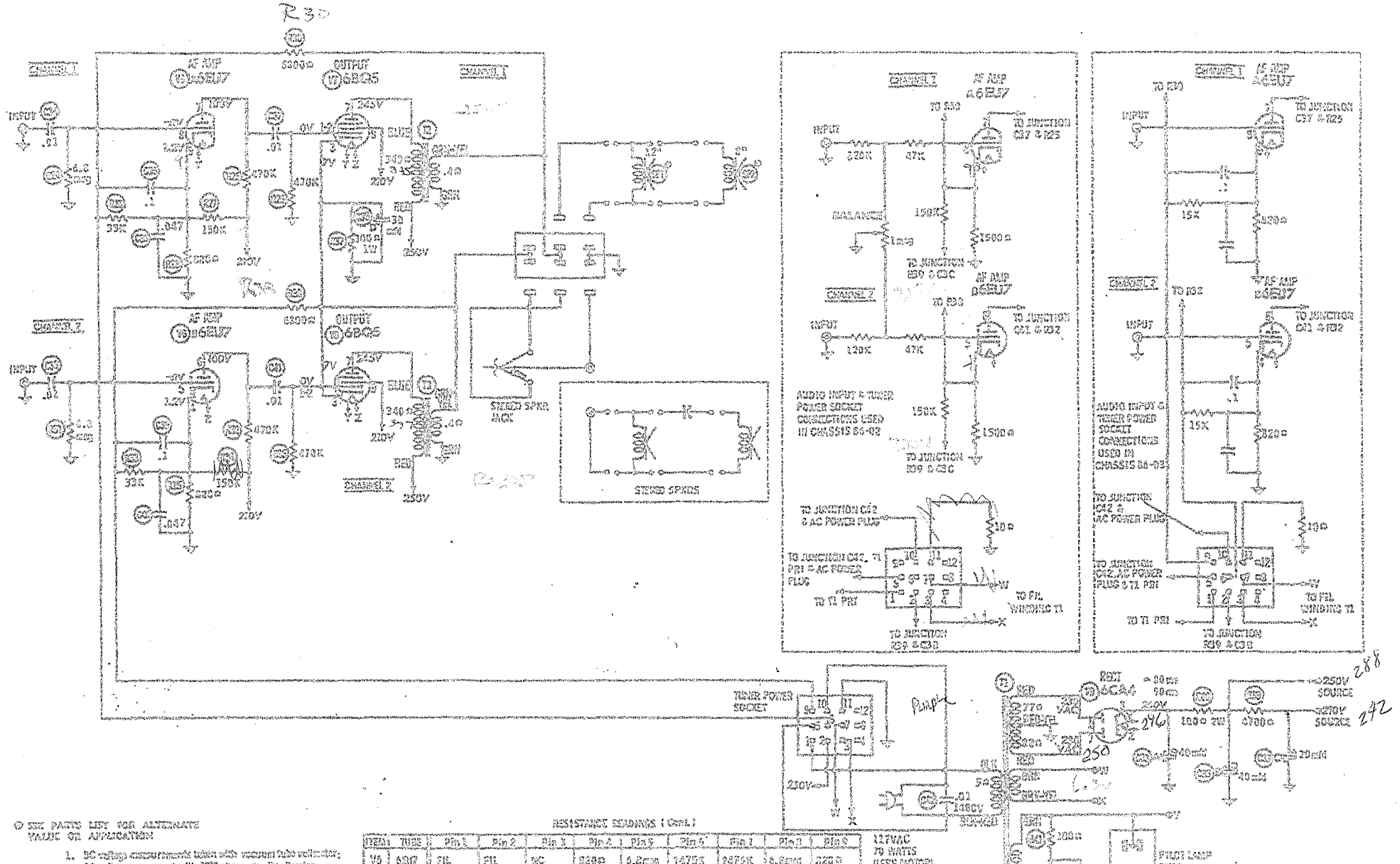

© SEE PARTS LIST FOR ALTERNATE VALUE OR APPLICATION

1. DC voltage measurements taken with vacuum tube voltmeter; AC voltages measured with 1000 ohm per volt voltmeter.
2. Socket connections are shown at bottom views.
3. Measured values are from socket pin to common ground.
4. Line voltage maintained at 117 volts for voltage readings.
5. Nominal tolerance of measurement values makes possible a variation of ±15% in voltage and resistance readings.
6. proper output load connected.

A PHOTOFACT STANDARD NOTATION SCHEMATIC
©Howard W. Sams & Co., Inc. 1961

RESISTANCE READINGS (Cont.)

ITEM	TUBE	Pin 1	Pin 2	Pin 3	Pin 4	Pin 5	Pin 6	Pin 7	Pin 8	Pin 9
V6	6EU7	FIL	FIL	NC	220Ω	6.8meg	1475K	1475K	6.8meg	220Ω
V7	6BQ5	NC	470K	100Ω	FIL	FIL	NC	1440Ω	NC	14800Ω
V8	6BQ5	NC	470K	100Ω	FIL	FIL	NC	1440Ω	NC	14800Ω
V9	6CA4	77Ω	NC	0 ING	FIL	FIL	NC	82Ω		

1 THIS READING WILL VARY DEPENDING UPON THE CONDITION OF THE ELECTROLYTIC IN THE CIRCUIT.
1 MEASURED FROM PIN 3 OF V9. NC NO CONNECTION

MAGNAVOX CHASSIS 59-11-00, 59-12-00, 59-14-00, 86-01-00, 86-01-10, 86-02-00, 86-02-10, 86-03-00, 86-03-10

AMP SCHEMATIC