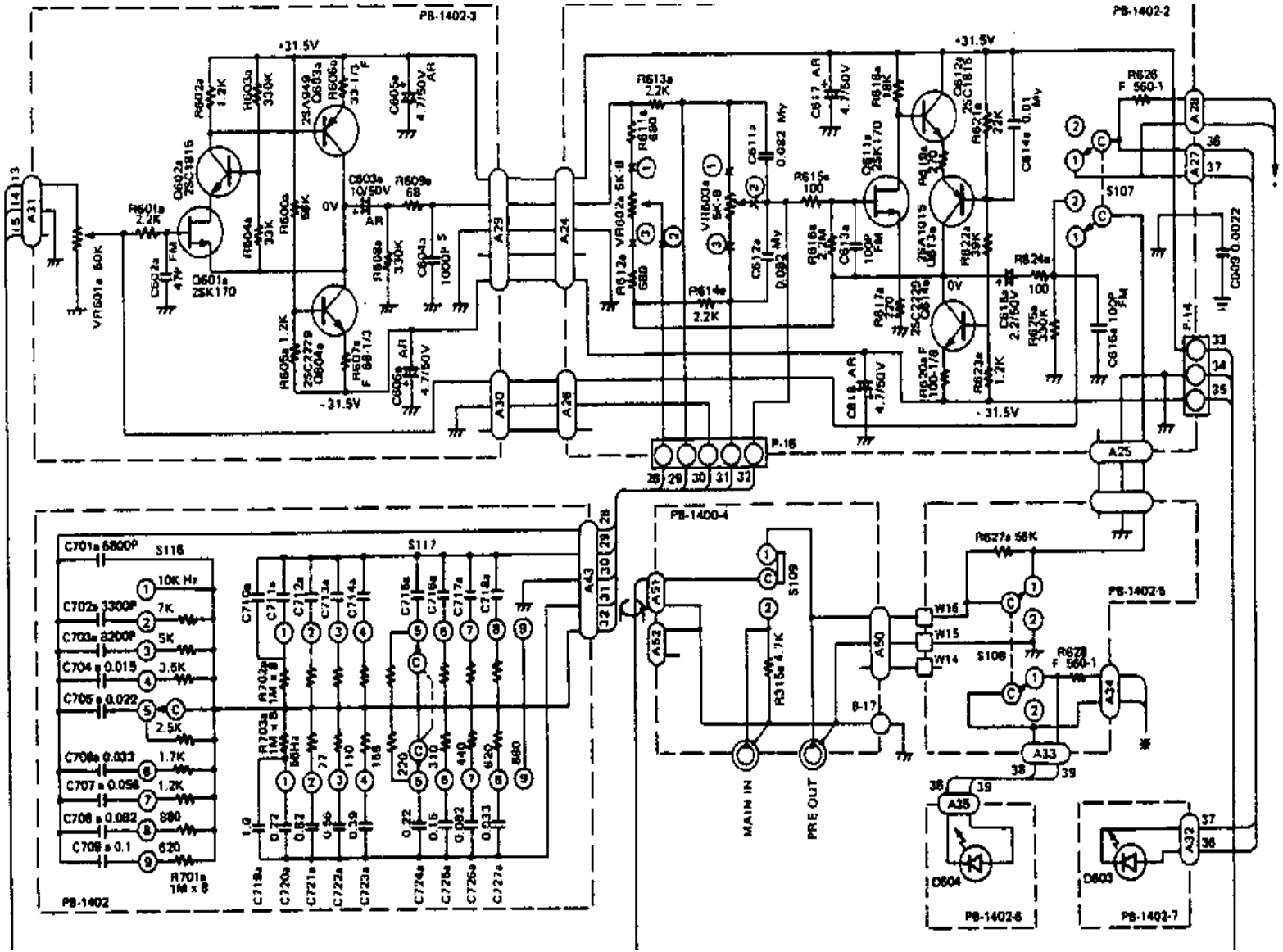

Baxandal Equalizer with Cutt-off select from Luxman L550