Low Voltage Madness

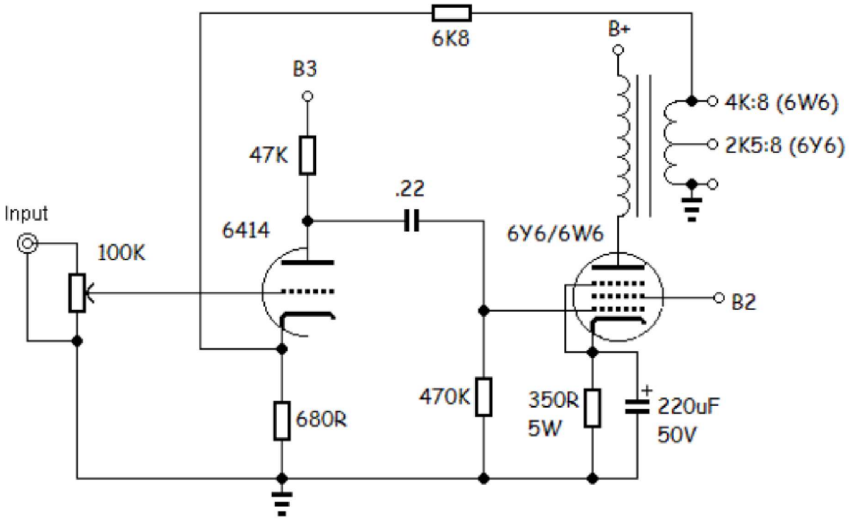

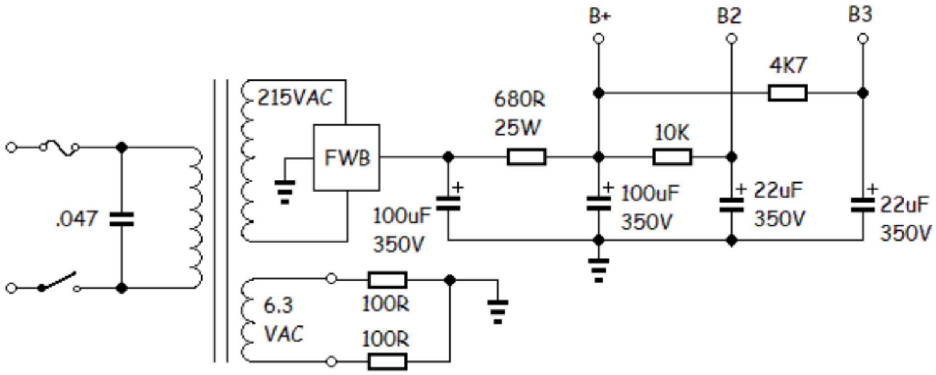

6Y6/6W6 Single-Ended

Evil Science Audio

Comments:
With 6Y6 will output 3.5 watts per channel.
With 6W6 output 3 watts per channel.
Uses global feedback
Power supply is CRC filtered solid state, with a large R (680 ohms).
Power supply a lot of what is termed as “sag”, where the output voltage varies greatly with load.
Interesting effect of this power supply is that the amplifier never ‘clips’ when overdriven, it simply compresses!