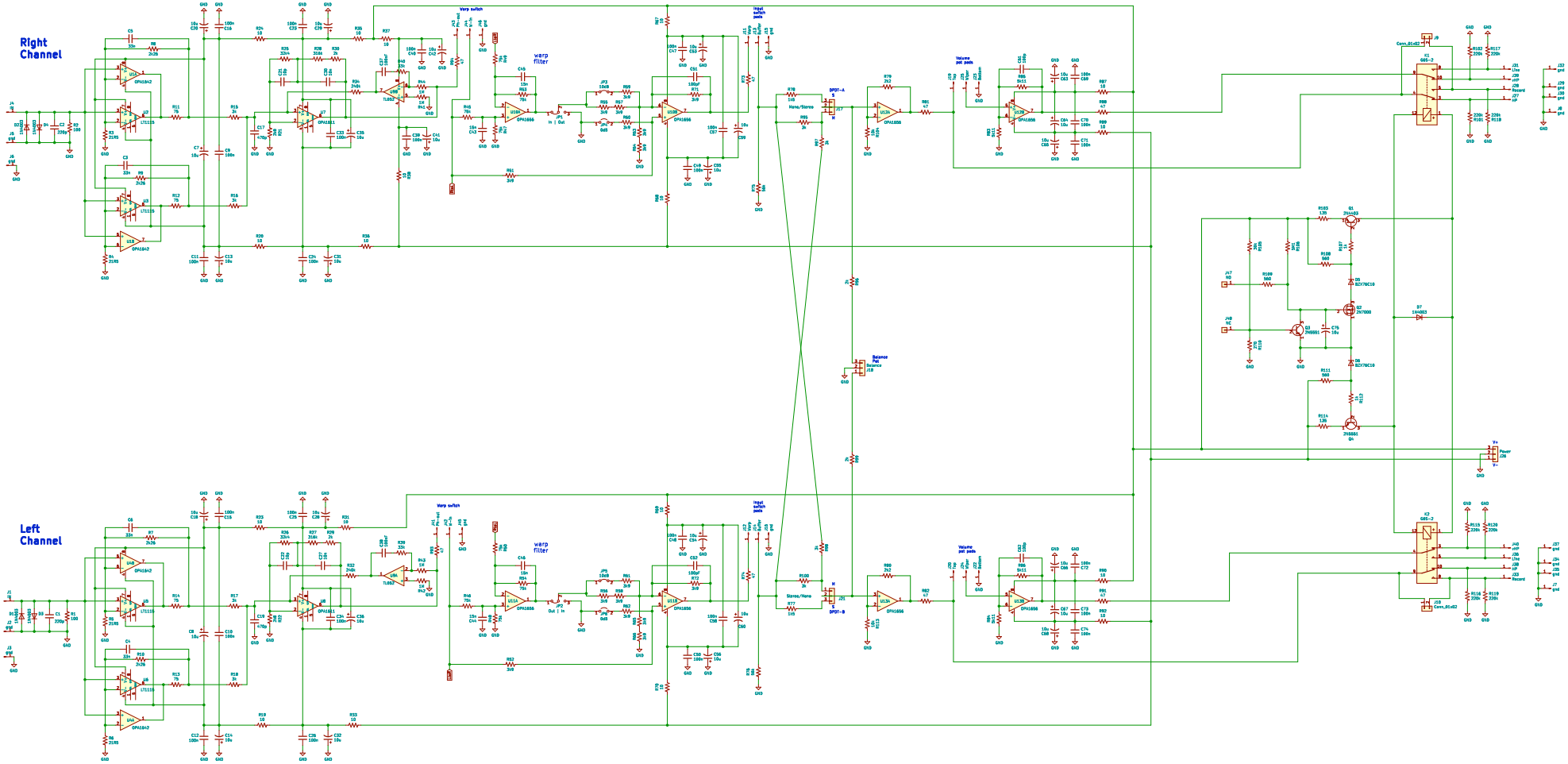

H1 MountingHole

H2 MountingHole

H3 MountingHole

H4 MountingHole

https://audiokarma.org/forums/index.php?threads/high-gain-opamp-based-preamp-for-low-output-mc-cartridges.879145

Sheet: /
File: LOMCPre.sch

Title: High Gain Opamp based Preamp for LOMC cartridges

Size: A1	Date: 2021-09-27	Rev: 3.1
KiCad E.D.A. kicad (5.1.2-1)-1		Id: 1/1