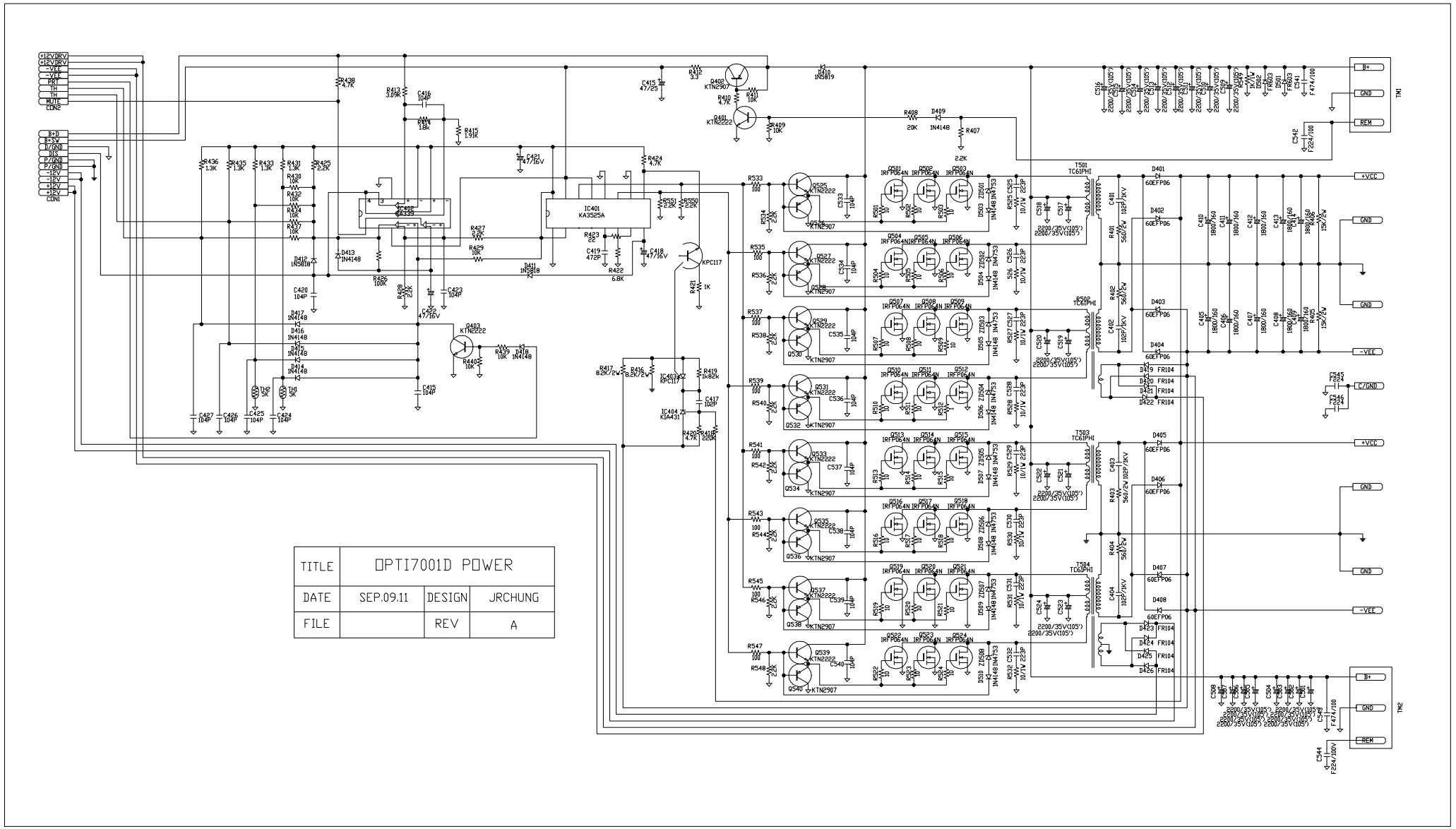

TITLE	OPTI7001D POWER		
DATE	SEP.09.11	DESIGN	JRCHUNG
FILE		REV	A