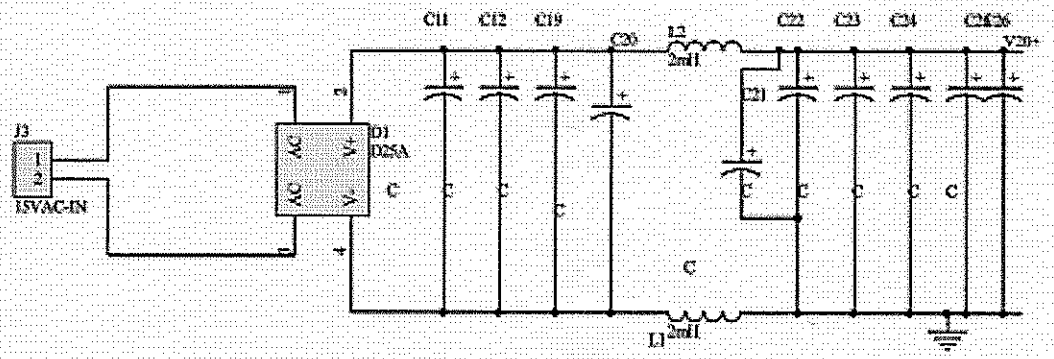
C11
C12
C19
C20
L2
2mH
C22
C23
C24
C25C26
V20+
C21
J3
15VAC-IN
D1
D25A
AC
V+
V-
C
L1
2mH

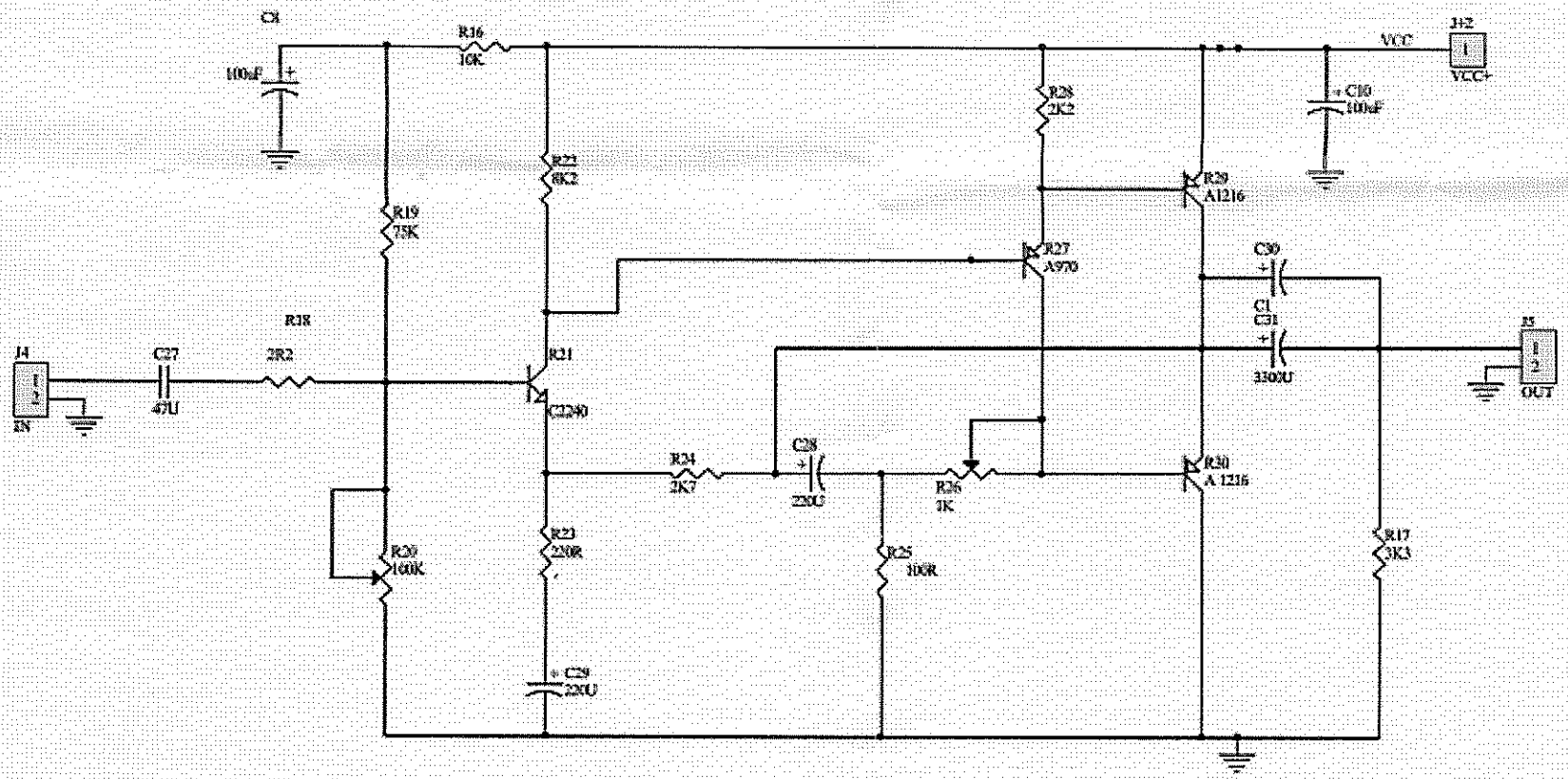
C8
100uF
R16
10K
VCC
J+2
VCC+
C10
100uF
R28
2K2
R22
8K2
R29
A1216
R19
75K
R27
A970
C30
C1
C31
3300U
J5
OUT
R18
2R2
J4
IN
C27
47U
R21
C2240
R24
2K7
C28
220U
R26
1K
R30
A 1216
R20
100K
R23
220R
R25
100R
R17
3K3
C29
220U