13 + ATT

ELECTRONIC INDUSTRIES ASSOCIATION

2001 EYE STREET, N. W.
WASHINGTON, D. C. 20006

TELEPHONE: (202) 457-4900
CABLES: ELECTRON WASHINGTON DC

E. I. A.
REGISTRATION
FILE

Announcement

of

Electron Device Type Registration

Release No. 6693

August 9, 1977

The Joint Electron Device Engineering Council announces the registration of the following electron device designation:

8751

according to the ratings and characteristics found on the attached data sheet on the application of

General Electric Company
Owensboro, KY

ELECTRONIC INNOVATIONS IN ACTION TUBES

8751

Planar Triode

The 8751 is a metal-ceramic triode intended for use as a plate-pulsed amplifier. It features a rugged bonded heater construction which also provides fast cathode warm-up.

CHARACTERISTICS AND TYPICAL OPERATION

AVERAGE CHARACTERISTICS

	Minimum	Bogey	Maximum	Units	Test Conditions Ef V	Eb V	Ib Ma	RL Ohms	Rk Ohms
Heater Voltage, AC or DC •	6.0	6.3	6.6	Volts					
Heater Current	---	1.05	---	Amperes	6.3	---	---	---	---
Plate Current	---	54	---	Milliamperes	6.3	200	---	---	50
Amplification Factor	---	40	---		6.3	200	---	---	50
Transconductance	---	28000	---	Micromhos	6.3	200	---	---	50
Grid Voltage, Cutoff	---	---	-30	Volts	6.3	500	0.1	100000	---
Direct Interelectrode Capacitances ♦									
Grid to Plate: (g to p)	---	2.45	---	pf					
Input: g to (h+k)	---	6.30	---	pf					
Output: p to (h+k)	---	0.10	---	pf					
Cathode Warm-up Time §	---	---	5	Seconds					

NOTES

* Both electrical and mechanical characteristics of development types are subject to change; therefore it is recommended that designers consult their General Electric field representative before designing around developmental types.

• The equipment designer should design the equipment so that heater voltage is centered at the specified bogey value, with heater supply variations restricted to maintain heater voltage within the specified tolerance.

♦ Measured at 450 KHz using a grounded adapter that provides shielding between external terminals of tube.

§ Time required for plate current to reach 80 percent of its steady-state value.

ABSOLUTE-MAXIMUM RATINGS

PLATE-PULSED AMPLIFIER SERVICE

Peak Positive-Pulse Plate Supply Voltage		
1 Microsecond Pulse Duration	2500	Volts
4 Microsecond Pulse Duration	2000	Volts
Duty Factor of Plate Pulse	0.004	
Plate Current: Average During Pulse #	4.0	Amperes
Negative Grid Voltage: Average During Pulse	100	Volts
Grid Current: Average During Pulse	1.5	Amperes
Plate Dissipation	30	Watts
Peak Heater-Cathode Voltage		
Heater Positive with Respect to Cathode	50	Volts
Heater Negative with Respect to Cathode	50	Volts
Envelope Temperature at Hottest Point▲	250	°C
Temperature Differential Between Two Adjacent Electrodes♦	100	°C
Mechanical Vibration (20-2000 Hz Sinusoidal)	30	G Peak

Absolute-Maximum ratings are limiting values of operating and environmental conditions applicable to any electron device of a specified type as defined by its published data and should not be exceeded under the worst probable conditions.

The device manufacturer chooses these values to provide acceptable serviceability of the device, making no allowance for equipment variations, environmental variations, and the effects of changes in operating conditions due to variations in the characteristics of the device under consideration and of all other electron devices in the equipment.

The equipment manufacturer should design so that initially and throughout life no absolute-maximum value for the intended service is exceeded with any device under the worst probable operating conditions with respect to supply-voltage variation, equipment component variation, equipment control adjustment, load variation, signal variation, environmental conditions, and variations in the characteristics of the device under consideration and of all other electron devices in the equipment.

NOTES

The regulation and/or series plate supply impedance must be such as to limit the peak current, with the tube considered a short circuit, to a maximum of 10 times the maximum plate current rating.

▲ For specific recommendations concerning higher temperature operation; contact your General Electric sales representative.

♦ This assumes no thermal heat sinking to any insulator.

The devices and arrangements disclosed herein may be covered by patents of General Electric Company or others. Neither the disclosure of any information herein nor the sale of devices by General Electric Company conveys any license under patent claims covering combinations of these devices with other devices or elements. In the absence of an express written agreement to the contrary, General Electric Company assumes no liability for patent infringement arising out of any use of these devices with other devices or elements by any purchaser or others.

AVERAGE CONSTANT-CURRENT CHARACTERISTICS

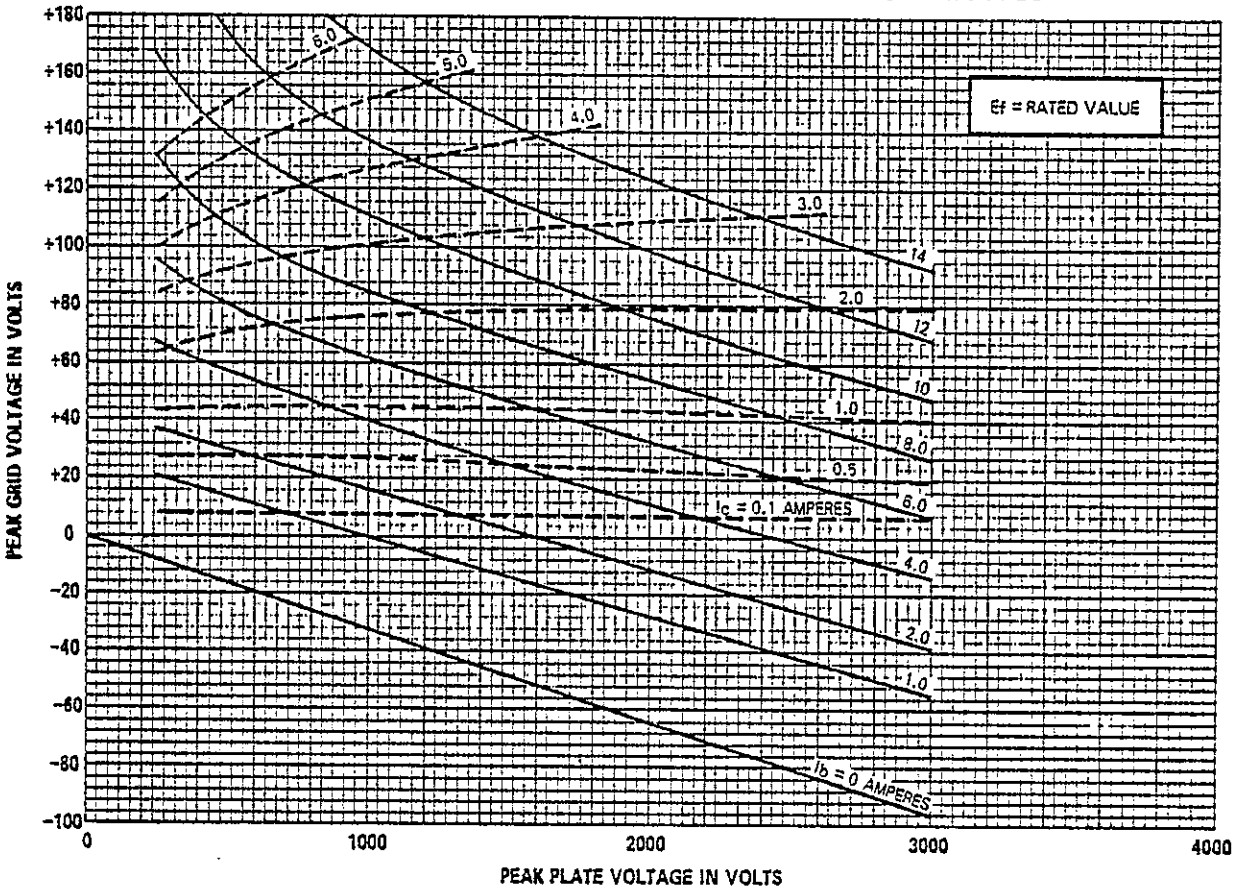

PHYSICAL DIMENSIONS

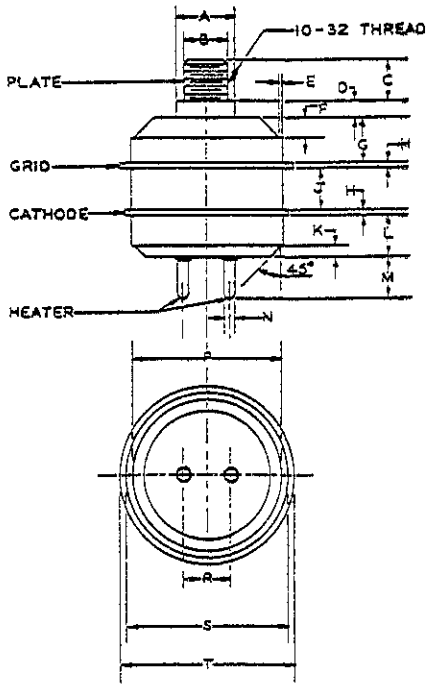

Ref.	INCHES		
	Min.	Nom.	Max.
A	0.247	---	0.253
B	---	---	0.190
C	0.130	---	0.170
D	0.070	---	0.090
E	---	0.005	---
F	0.075	---	0.095
G	0.182	---	0.192
H	0.025	---	0.031
J	0.170	---	0.180
K	0.045	---	0.055
L	0.170	---	0.180
M	0.170	---	0.180
N	0.047	---	0.053
P	0.635	---	0.665
R	0.186	---	0.214
S	0.698	---	0.708
T	0.748	---	0.758

TUBE PRODUCTS DEPARTMENT
Owensboro, Kentucky 42301

GENERAL ELECTRIC

GENERAL ELECTRIC

ELECTRONIC
COMPONENTS
BUSINESS
DIVISION

GENERAL ELECTRIC COMPANY . . . . . 316 EAST NINTH STREET
OWENSBORO, KENTUCKY 42301, Phone (502) 683-2401

TUBE PRODUCTS DEPARTMENT

July 26, 1977

Mr. S. K. Forish
Type Administration
Electronic Industries Association
2001 Eye Street NW
Washington, DC 20006

Dear Mr. Forish:

Pursuant to your discussion with us regarding a final determination on the type reservations held for General Electric types, technical data on our 8751 tube is enclosed. A set of one hundred (100) copies is being submitted which we trust will be adequate for completing the EIA registration on this type.

As Chris McCool indicated earlier, we plan to submit finalized technical data sheets on certain other types (8908, 8950, and 8981) within a few months.

Very truly yours,

W H Lemaster

W. H. Lemaster
Microwave Tube Engineering

WHL:bls

Enc.

cc: P. S. Coomes
cc: C. D. McCool

GENERAL ELECTRIC
COMPANY

316 EAST NINTH STREET, OWENSBORO, KENTUCKY 42301 . . . CODE 502, TELEPHONE 683-2401

ELECTRONIC
COMPONENTS
DIVISION

TUBE DEPARTMENT

September 30, 1966

OK Bch.

Mr. J. P. Foltz
Electronic Industries Association
2001 Eye Street
Washington, D. C.

Dear Mr. Foltz:

Please reserve JEDEC designations in the 4-digit series for our Y-1397 and Y-1536. One copy of each data sheet is enclosed.

Very truly yours,

Fred C. Dyer, Jr., Project Engineer
Technical Data & Engineering Programs

FCD'dd
Enclosures

JEDEC

Y-1397 8750

Y-1536 8751

E.I.A. ENGINEERING OFFICE
RECEIVED
OCT 3 - 1966

Code 3

18 200

Technical Data

TUBE DEPARTMENT, OWENSBORO, KENTUCKY

OBJECTIVE FOR DEVELOPMENTAL TYPE

Y-1536* 8751

PLANAR TRIODE

The Y-1536 is a metal-ceramic triode intended for use as a plate-pulsed and grid-pulsed oscillator or amplifier.

GENERAL

Electrical

Cathode - Coated Unipotential

Heater Characteristics and Ratings

Heater Voltage, AC or DC‡	6.3±0.3	Volts
Heater Current§	1.05	Amperes
Direct Interelectrode Capacitances		
Grid to Plate: (g to p)	2.6	pf
Input: g to (h + k)	6.3	pf
Output: p to (h + k)	0.1	pf

Mechanical

Operating Position - Any

MAXIMUM RATINGS

Plate-Pulsed Oscillator or Amplifier Service - Absolute-Maximum Values

Cathode Heating Time, minimum	10	Seconds
Peak Positive-Pulse Plate Supply Voltage	3000	Volts
Duty Factor of Plate Pulse#	0.004	
Pulse Duration	4.0	Microseconds
Plate Current		
Average#	20	Milliamperes
Average During Plate Pulse	5.0	Amperes
Negative Grid Voltage		
Average During Plate Pulse	100	Volts
Grid Current		
Average#	6.0	Milliamperes
Average During Plate Pulse	1.5	Amperes
Plate Dissipation#	30	Watts
Peak Heater-Cathode Voltage		
Heater Positive with Respect to Cathode	50	Volts
Heater Negative with Respect to Cathode	50	Volts
Envelope Temperature at Hottest Point	250	C

MAXIMUM RATINGS (CONTINUED)

Absolute-Maximum ratings are limiting values of operating and environmental conditions applicable to any electron tube of a specified type as defined by its published data and should not be exceeded under the worst probable conditions.

The tube manufacturer chooses these values to provide acceptable serviceability of the tube, making no allowance for equipment variations, environmental variations, and the effects of changes in operating conditions due to variations in the characteristics of the tube under consideration and of all other electron devices in the equipment.

The equipment manufacturer should design so that initially and throughout life no absolute-maximum value for the intended service is exceeded with any tube under the worst probable operating conditions with respect to supply-voltage variation, equipment component variation, equipment control adjustment, load variation, signal variation, environmental conditions, and variations in the characteristics of the tube under consideration and of all other electron devices in the equipment.

→ CHARACTERISTICS AND TYPICAL OPERATION

Average Characteristics

Plate Voltage	200	Volts
Cathode-Bias Resistor	50	Ohms
Amplification	40	
Plate Resistance, approximate	1430	Ohms
Transconductance	28000	Micromhos
Plate Current	54	Milliamperes

Plate-Pulsed Oscillator Service

Frequency	1200	Megacycles
Heater Voltage	6.3	Volts
Duty Factor	0.004	
Pulse Duration	4.0	Microseconds
Pulse Repetition Rate	1000	Pulses per Second
Peak Positive-Pulse Supply Voltage	2500	Volts
Plate Current		
Average	20	Milliamperes
Average During Plate Pulse	5.0	Amperes
Grid Current		
Average	Ø	Milliamperes
Average During Plate Pulse	Ø	Amperes
Useful Power Output		
Average	20	Watts
Average During Plate Pulse	5.0	Kilowatts

NOTES

* Publication of these data does not obligate the General Electric Company to manufacture a tube with these characteristics.

÷ The equipment designer should design the equipment so that heater voltage is centered at the specified bogey value, with heater supply variations restricted to maintain heater voltage within the specified tolerance.

§ Heater current of a bogey tube at Ef = 6.3 volts.

\# In any 5000 microsecond interval.

Ø To be determined.

Y-1536

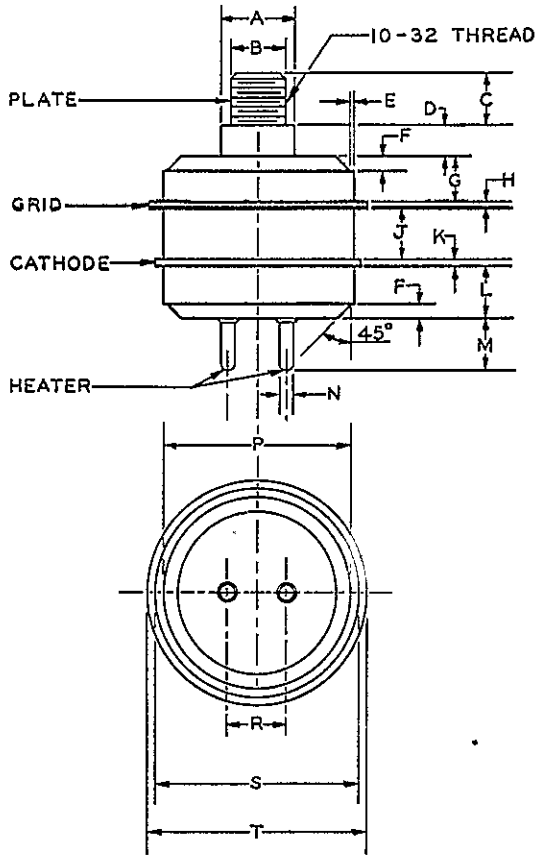

Ref.	Inches		
	Minimum	Nominal	Maximum
A	0.247		0.253
B			0.190
C	0.120		0.160
D	0.105		0.125
E		0.005	
F	0.040		0.060
G	0.145		0.155
H	0.025		0.031
J	0.170		0.180
K	0.025		0.031
L	0.170		0.180
M	0.170		0.180
N	0.047		0.053
P	0.635		0.665
R	0.186		0.214
S	0.698		0.708
T	0.748		0.758