# JAS200

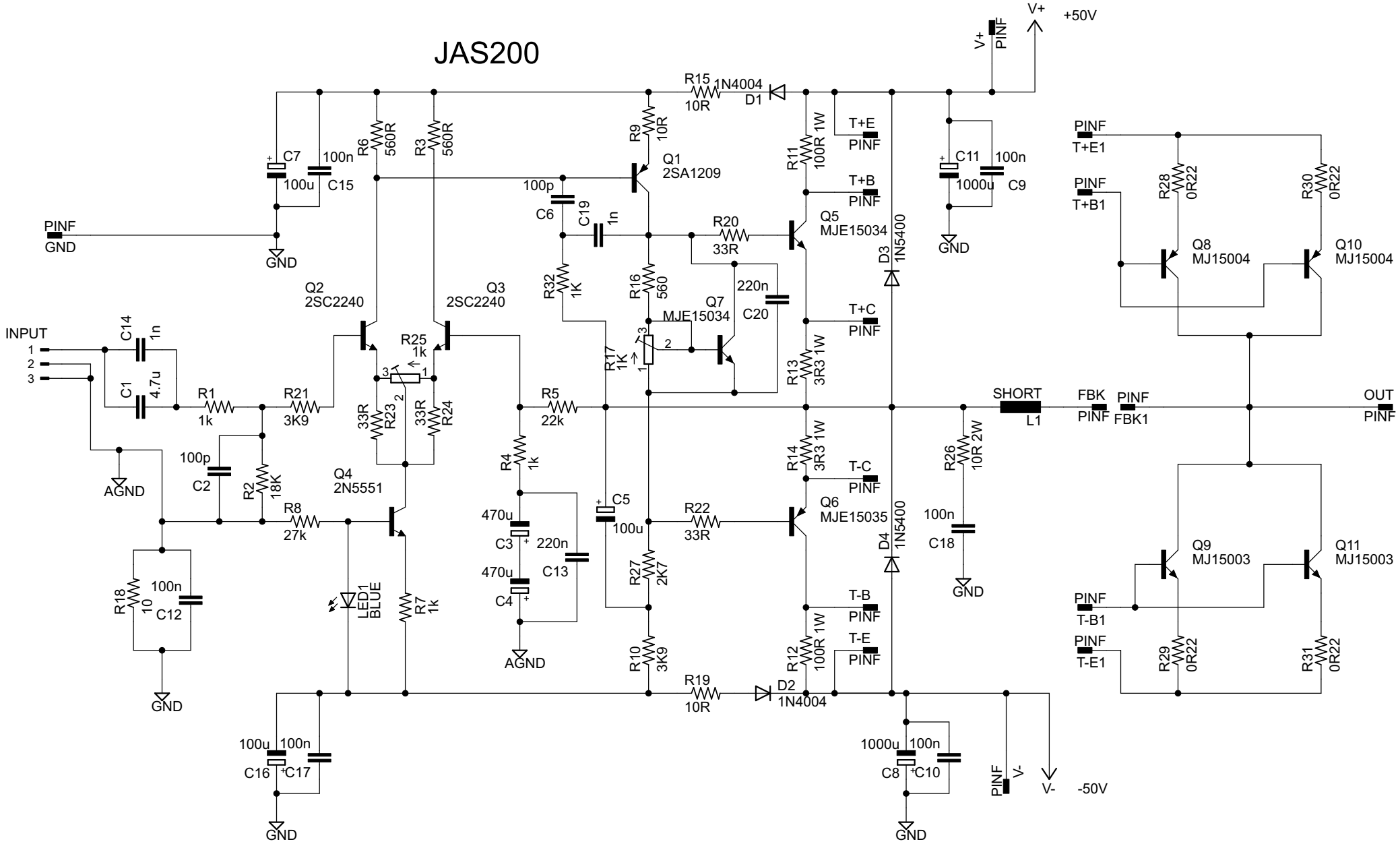
V+
+50V
V+
PINF
R15
10R
1N4004
D1
R9
10R
Q1
2SA1209
R11
100R 1W
T+E
PINF
T+B
PINF
Q5
MJE15034
D3
1N5400
T+C
PINF
R13
3R3 1W
C11
1000u
100n
C9
GND
PINF
T+E1
PINF
T+B1
R28
0R22
R30
0R22
Q8
MJ15004
Q10
MJ15004
C7
100u
100n
C15
R6
560R
R3
560R
100p
C6
C19
1n
R20
33R
220n
C20
R32
1K
R16
560
Q7
MJE15034
R17
1K
PINF
GND
GND
Q2
2SC2240
Q3
2SC2240
R25
1k
INPUT
1
2
3
C14
1n
C1
4.7u
R1
1k
R21
3K9
33R
R23
33R
R24
R5
22k
SHORT
L1
FBK
PINF
PINF
FBK1
OUT
PINF
R4
1k
R14
3R3 1W
T-C
PINF
R26
10R 2W
100p
C2
R2
18K
AGND
Q4
2N5551
R8
27k
470u
C3
220n
C13
470u
C4
C5
100u
R22
33R
Q6
MJE15035
D4
1N5400
100n
C18
GND
Q9
MJ15003
Q11
MJ15003
R18
10
100n
C12
LED1
BLUE
R7
1k
R27
2K7
T-B
PINF
R12
100R 1W
T-E
PINF
PINF
T-B1
PINF
T-E1
R29
0R22
R31
0R22
AGND
R10
3K9
R19
10R
D2
1N4004
GND
100u
100n
C16
C17
GND
1000u
100n
C8
C10
GND
PINF
V-
V-
-50V