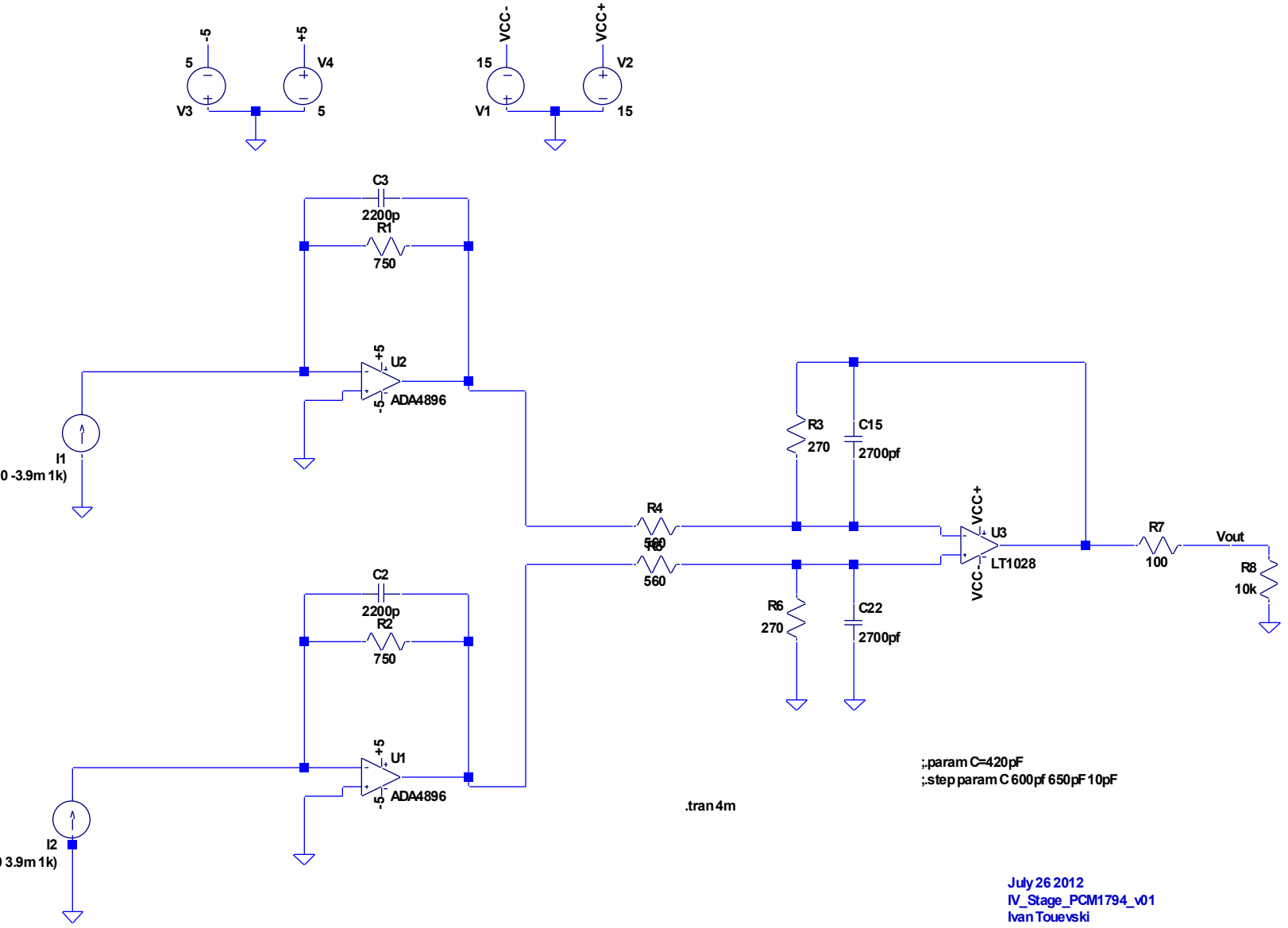
-5
5
V3
+5
V4
5
VCC-
15
V1
VCC+
V2
15
C3
2200p
R1
750
U2
+5
-5
ADA4896
I1
0 -3.9m 1k)
C2
2200p
R2
750
U1
+5
-5
ADA4896
I2
) 3.9m 1k)
R4
560
560
R3
270
C15
2700pf
R6
270
C22
2700pf
VCC+
U3
VCC-
LT1028
R7
100
Vout
R8
10k
.tran 4m
;.param C=420pF
;.step param C 600pf 650pF 10pF
July 26 2012
IV_Stage_PCM1794_v01
Ivan Touevski