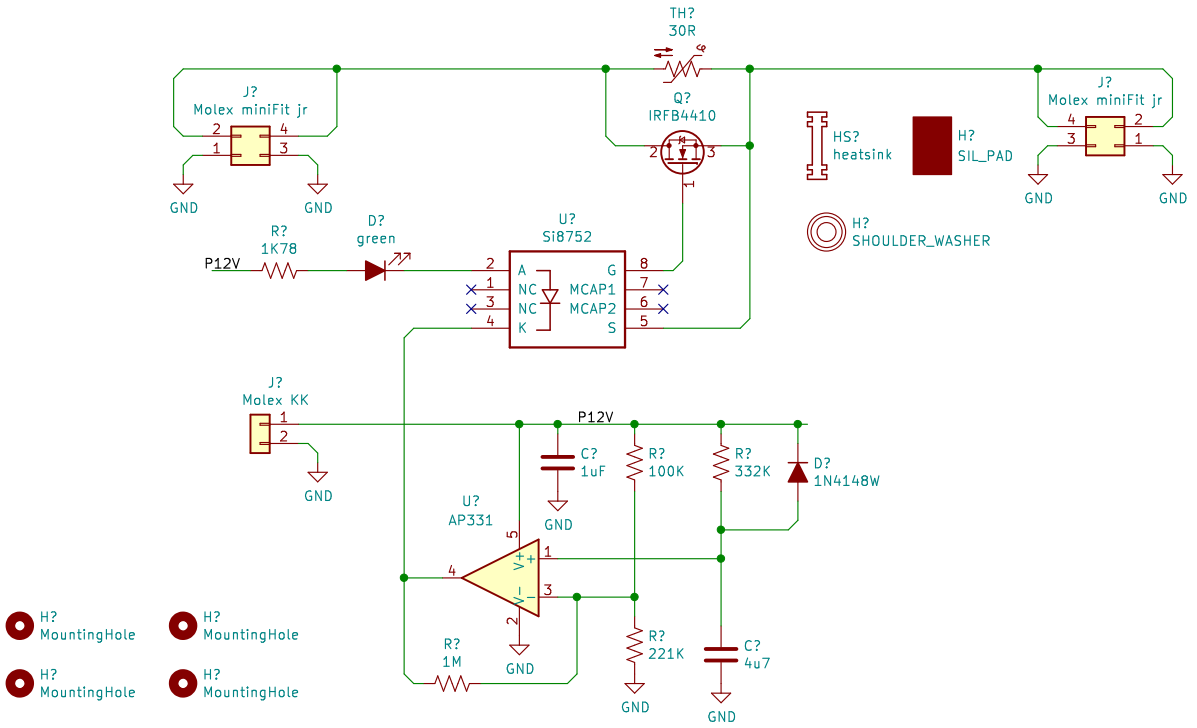

j hofland

Sheet: /
File: inrush_limit.sch

Title: Inrush Current Limit

Size: A4	Date:	**Rev: 1.0**
KiCad E.D.A. kicad (5.1.2)-2		Id: 1/1