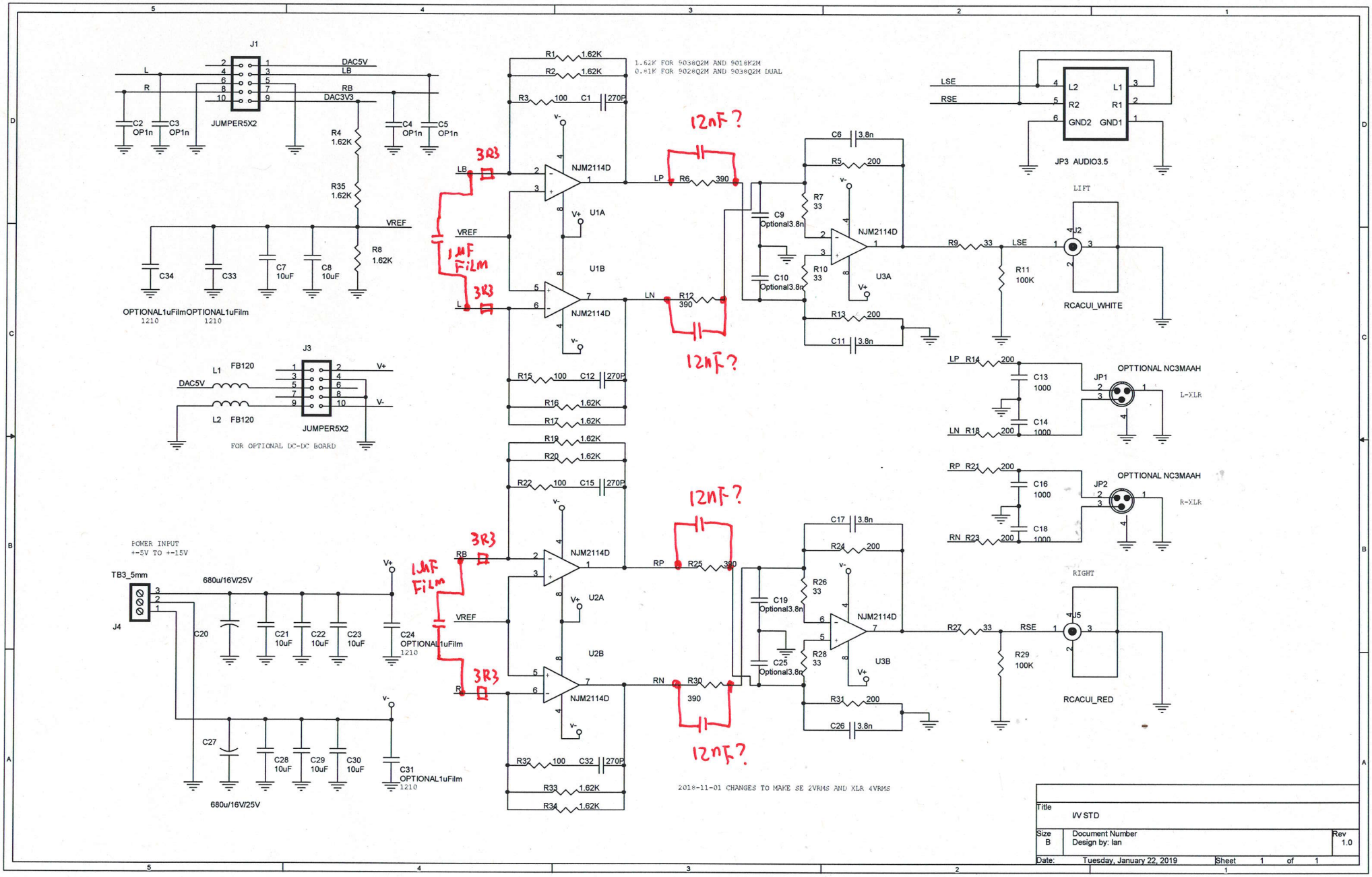

J1
JUMPER5X2
DAC5V
LB
RB
DAC3V3
C2 OP1n
C3 OP1n
C4 OP1n
C5 OP1n
R4 1.62K
R35 1.62K
R8 1.62K
VREF
C34
C33
C7 10uF
C8 10uF
OPTIONAL1uFilm 1210
OPTIONAL1uFilm 1210
J3
L1 FB120
L2 FB120
DAC5V
V+
V-
JUMPER5X2
FOR OPTIONAL DC-DC BOARD
POWER INPUT
+-5V TO +-15V
TB3_5mm
J4
680u/16V/25V
C20
C21 10uF
C22 10uF
C23 10uF
C24 OPTIONAL1uFilm 1210
C27
C28 10uF
C29 10uF
C30 10uF
C31 OPTIONAL1uFilm 1210
680u/16V/25V
R1 1.62K
R2 1.62K
R3 100
C1 270P
1.62K FOR 9038Q2M AND 9018K2M
0.81K FOR 9028Q2M AND 9038Q2M DUAL
NJM2114D
U1A
U1B
U2A
U2B
3R3
1uF FILM
12nF?
LP
LN
RP
RN
R6 390
R12 390
R25 390
R30 390
R15 100
C12 270P
R16 1.62K
R17 1.62K
R19 1.62K
R20 1.62K
R22 100
C15 270P
R32 100
C32 270P
R33 1.62K
R34 1.62K
C6 3.8n
R5 200
R7 33
R10 33
C9 Optional3.8n
C10 Optional3.8n
R13 200
C11 3.8n
U3A
C17 3.8n
R24 200
R26 33
R28 33
C19 Optional3.8n
C25 Optional3.8n
R31 200
C26 3.8n
U3B
R9 33
R11 100K
LSE
RSE
JP3 AUDIO3.5
L2
R2
GND2
L1
R1
GND1
LIFT
J2
RCACUI_WHITE
LP R14 200
C13 1000
C14 1000
LN R18 200
JP1
OPTTIONAL NC3MAAH
L-XLR
RP R21 200
C16 1000
C18 1000
RN R23 200
JP2
OPTTIONAL NC3MAAH
R-XLR
RIGHT
R27 33
R29 100K
J5
RCACUI_RED
2018-11-01 CHANGES TO MAKE SE 2VRMS AND XLR 4VRMS
Title
I/V STD
Size B
Document Number
Design by: Ian
Rev 1.0
Date: Tuesday, January 22, 2019
Sheet 1 of 1