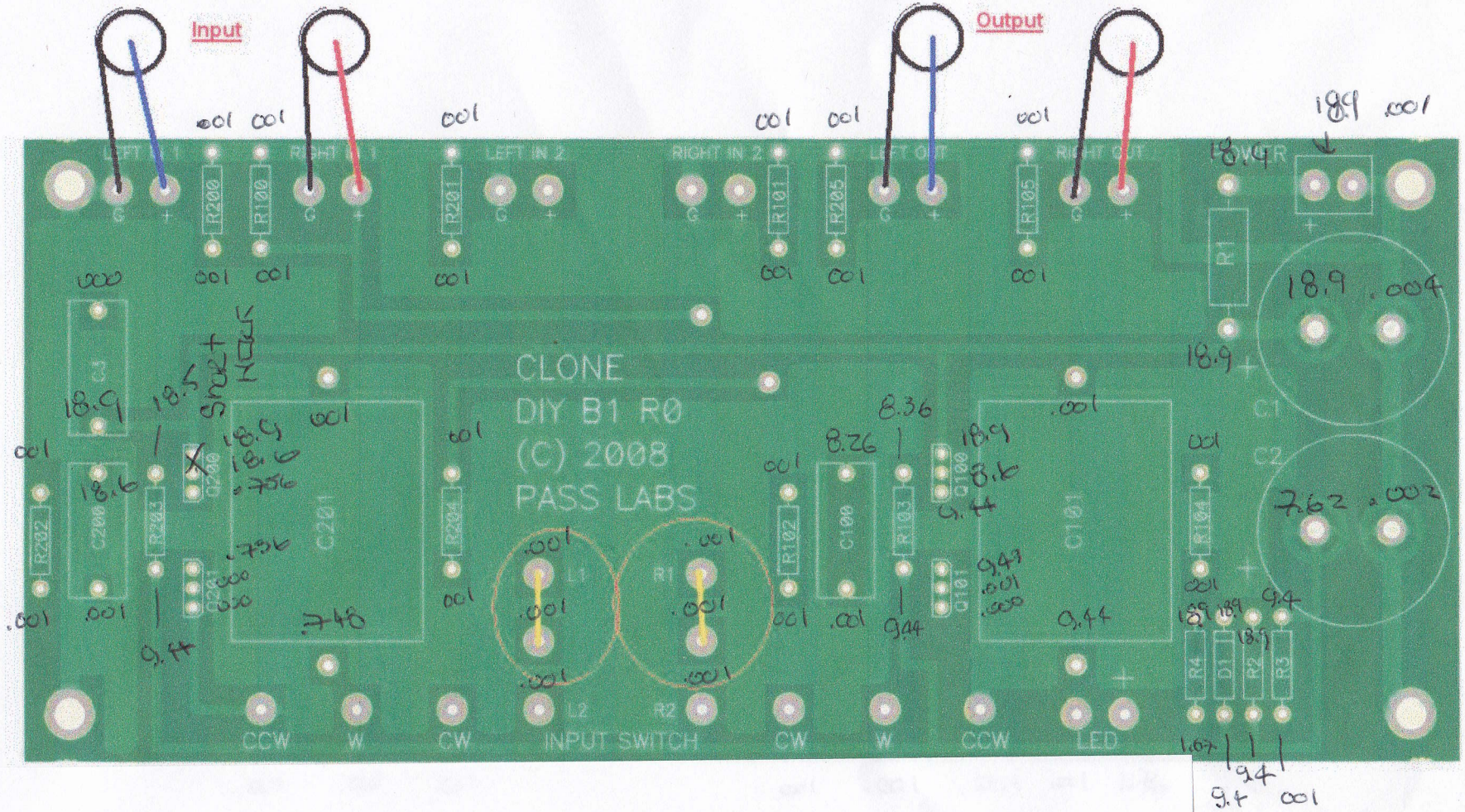VALUES AFTER SHORT