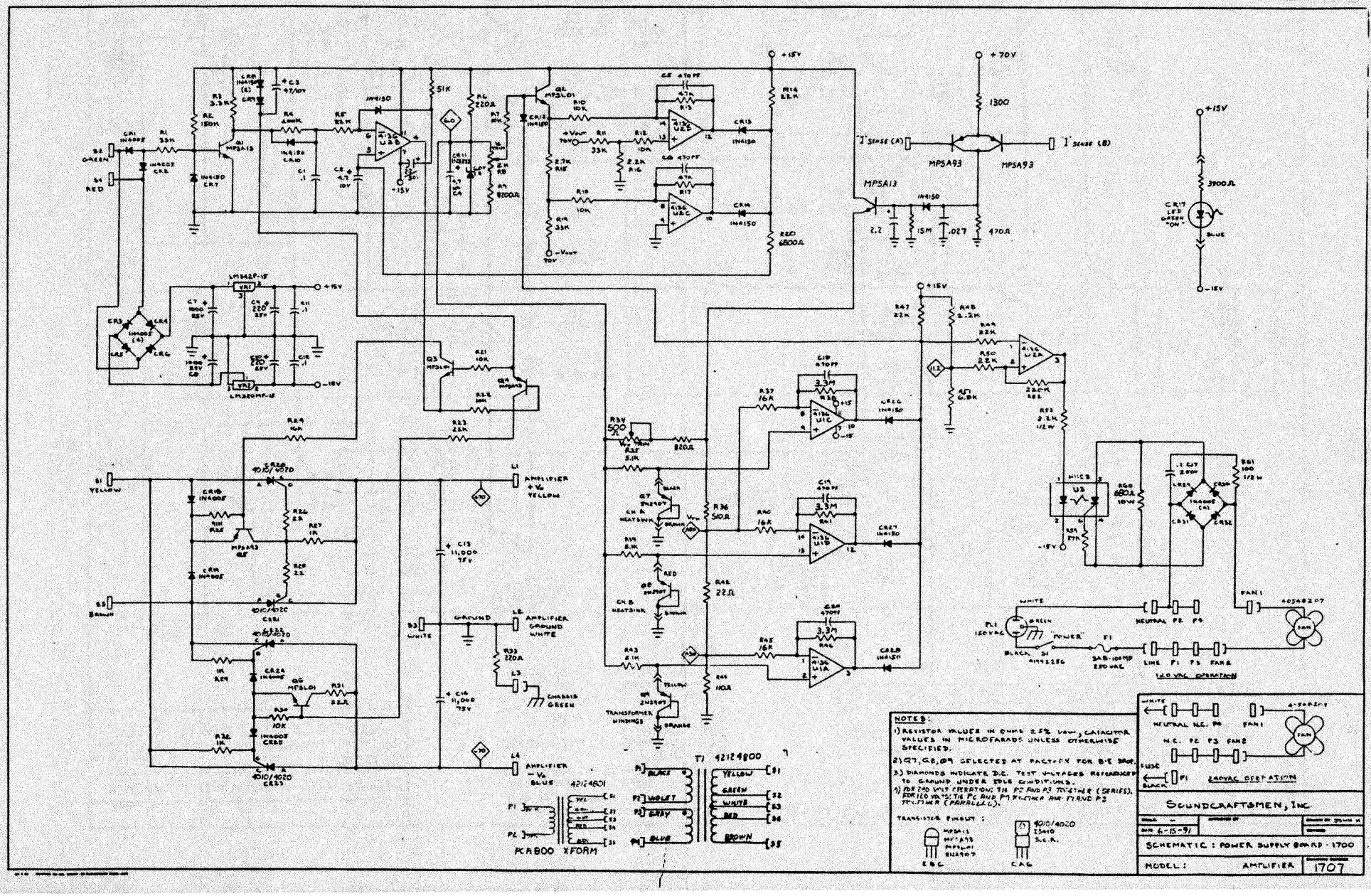POWER SUPPLY BOARD #1700-F for amplifier models PCR800, PM840, PM860, PRO-POWER ONE, PRO-POWER THREE, PRO-POWER FOUR, DJ900 and 450X2.