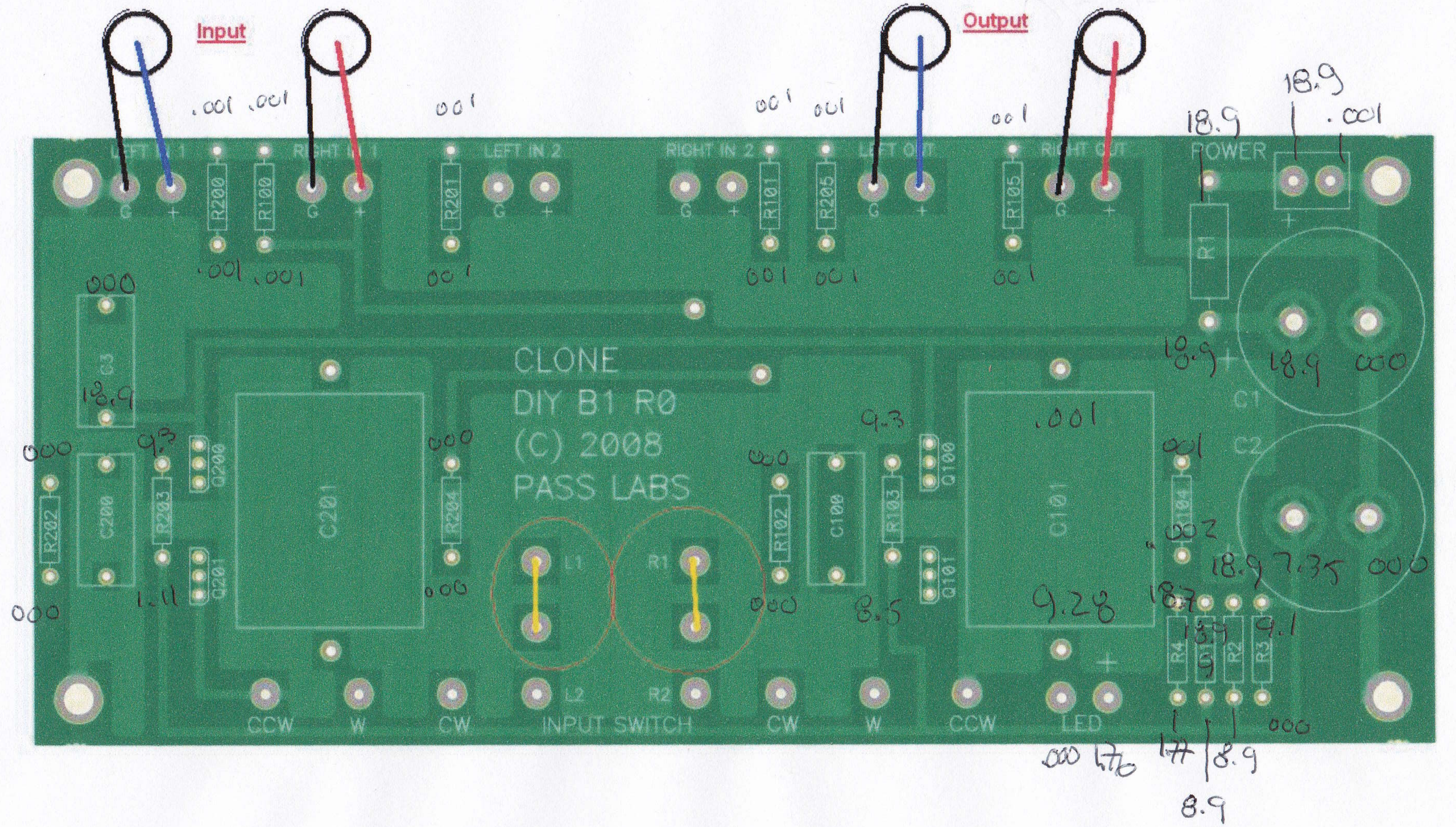Values before sheet