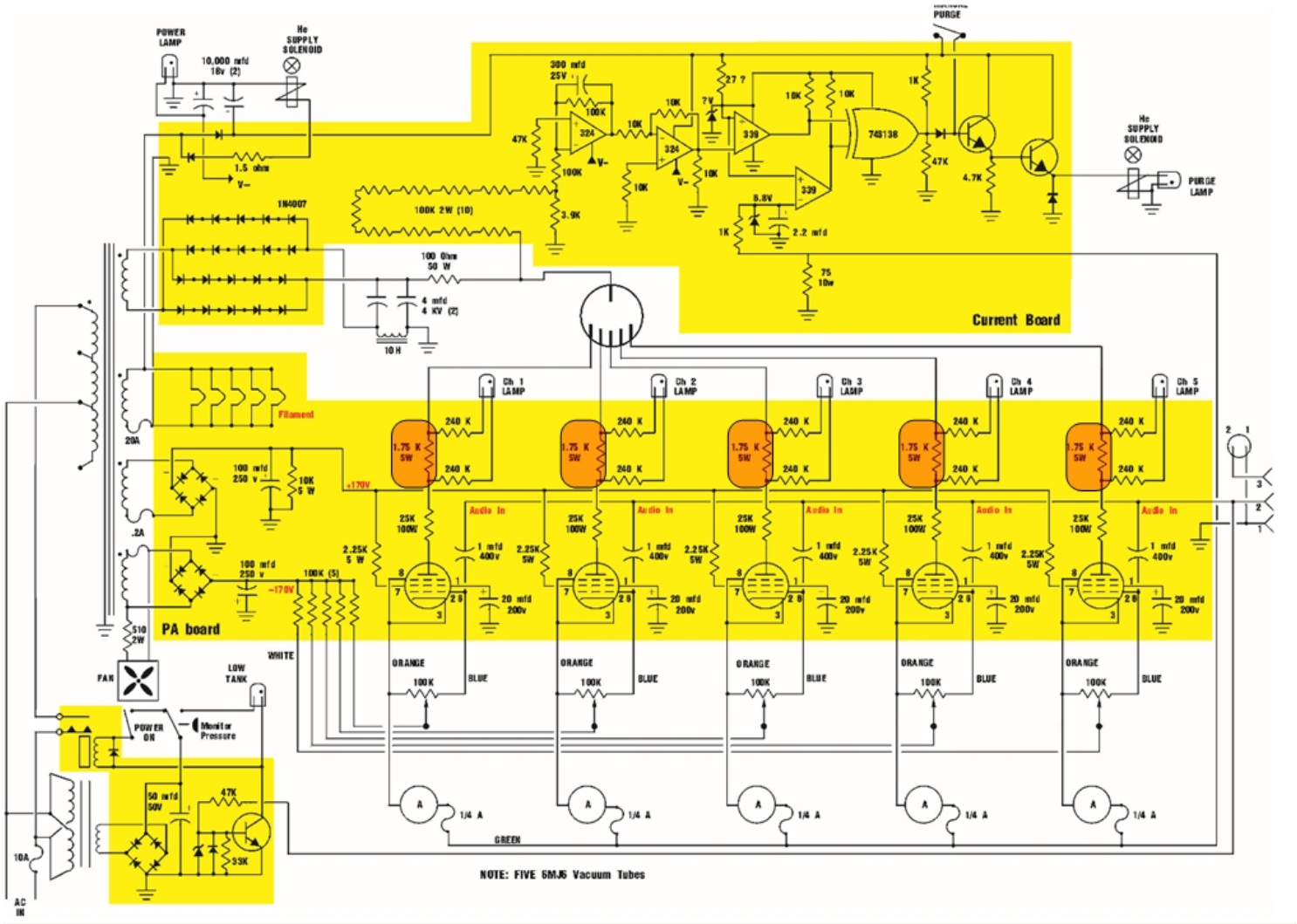
POWER LAMP
He SUPPLY SOLENOID
10,000 mfd 18v (2)
1.5 ohm
V-
1N4007
100K 2W (10)
100 Ohm 50 W
4 mfd 4 KV (2)
10 H
300 mfd 25V
100K
324
47K
10K
3.9K
27 ?
7V
339
74S138
1K
47K
4.7K
6.8V
2.2 mfd
75 10w
PURGE
He SUPPLY SOLENOID
PURGE LAMP
Current Board
Ch 1 LAMP
Ch 2 LAMP
Ch 3 LAMP
Ch 4 LAMP
Ch 5 LAMP
240 K
1.75 K 5W
Filament
20A
.2A
100 mfd 250 v
10K 5 W
+170V
-170V
100K (5)
2.25K 5 W
25K 100W
Audio In
1 mfd 400v
20 mfd 200v
PA board
510 2W
FAN
WHITE
LOW TANK
POWER ON
Monitor Pressure
ORANGE
BLUE
100K
50 mfd 50V
47K
33K
10A
AC IN
1/4 A
GREEN
NOTE: FIVE 6MJ6 Vacuum Tubes