HiFi ENGINE®

For more Hi-Fi manuals and set-up information
please visit www.hifiengine.com

NAD SERVICE MANUAL

3020B
3120

INTEGRATED STEREO AMPLIFIERS

3020B AND 3120 REAR PANEL CONNECTIONS

ENGLISH
1. Ground
2. Phono
3. MM/MC Phono Selector
4. Tuner
5. Aux
6. Tape Play/Record
7. Pre-Amp Out, Normal In, Lab In
8. Speakers
9. Soft Clipping
10. AC Convenience Outlets
11. Impedance

FRANCAS
1. Masse
2. Entree phono
3. Selectour Bobine mobile/Aimant mobile
4. Entree tuner
5. Entree auxiliaire
6. Entrees/Sorties-Magnetophone-
7. Sortie preampli,
   entree ampli de puissance - normal-
   entree ampli de puissance - labo-
8. Bornes pour haut-parleurs
9. Ecretage en douceur
10. Prises de courant CA
11. Impedance

DEUTSCH
1. Erde
2. Plattenspieler-Eingang
3. MM/MC-Schalter
4. Rundfunkeingang
5. Zusatzeingang
6. Tonband-Wiedergabe/Aufnahme
7. Vorverstarker-Ausgang, Normal-Eingang, Labor-Eingang
8. Lautsprecheranschluß
9. Lautsprecherimpedanzschalter
10. Netzkabel
11. Impedance

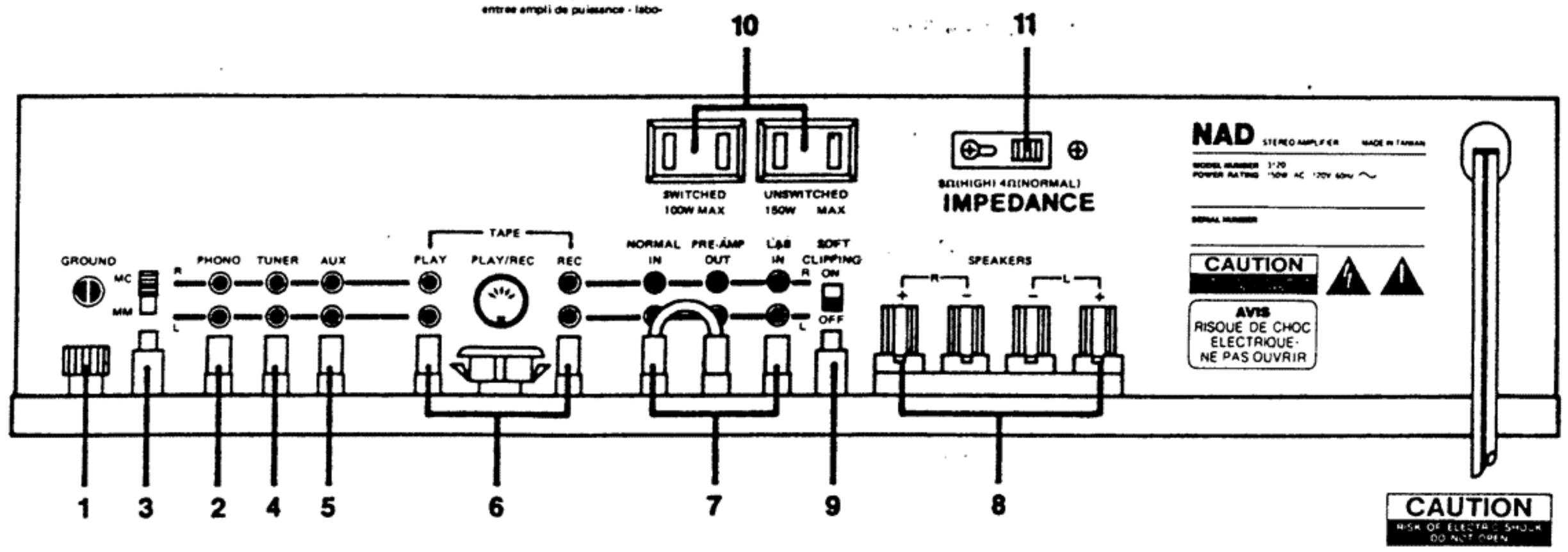

CAUTION: TO REDUCE THE RISK OR ELECTRIC SHOCK, DO NOT REMOVE COVER (OR BACK). NO USER-SERVICEABLE PARTS INSIDE. REFER SERVICING TO QUALIFIED SERVICE PERSONNEL

3020B FRONT PANEL CONTROLS

ENGLISH
1. Power
2. Phones
3. Bass
4. Treble
5. Balance
6. Aux/Tuner/Phono
7. Tape
8. Mono
9. Loudness
10. Volume
11. LED Power Meter

FRANCAIS
1. Alimentation
2. Casque decoute
3. Graves
4. Aigus
5. Balance entre canaux
6. Aux Tuner/Phono
7. Magnetophone
8. Mono
9. Compensateur physiologique
10. Volume/Equilibrage
11. Indicateur de puissance par diodes photoluminescentes

DEUTSCH
1. Netz
2. Kopfhörerausgang
3. Baßregler
4. Hohenregler
5. Balanceregler
6. Zusatzgerat, Radio, Plattenspieler
7. Tonbandschalter
8. Monoschalter
9. Gehorichtige Lautstarkenregelung
10. Lautstarke
11. LED-Leistungsanzeige

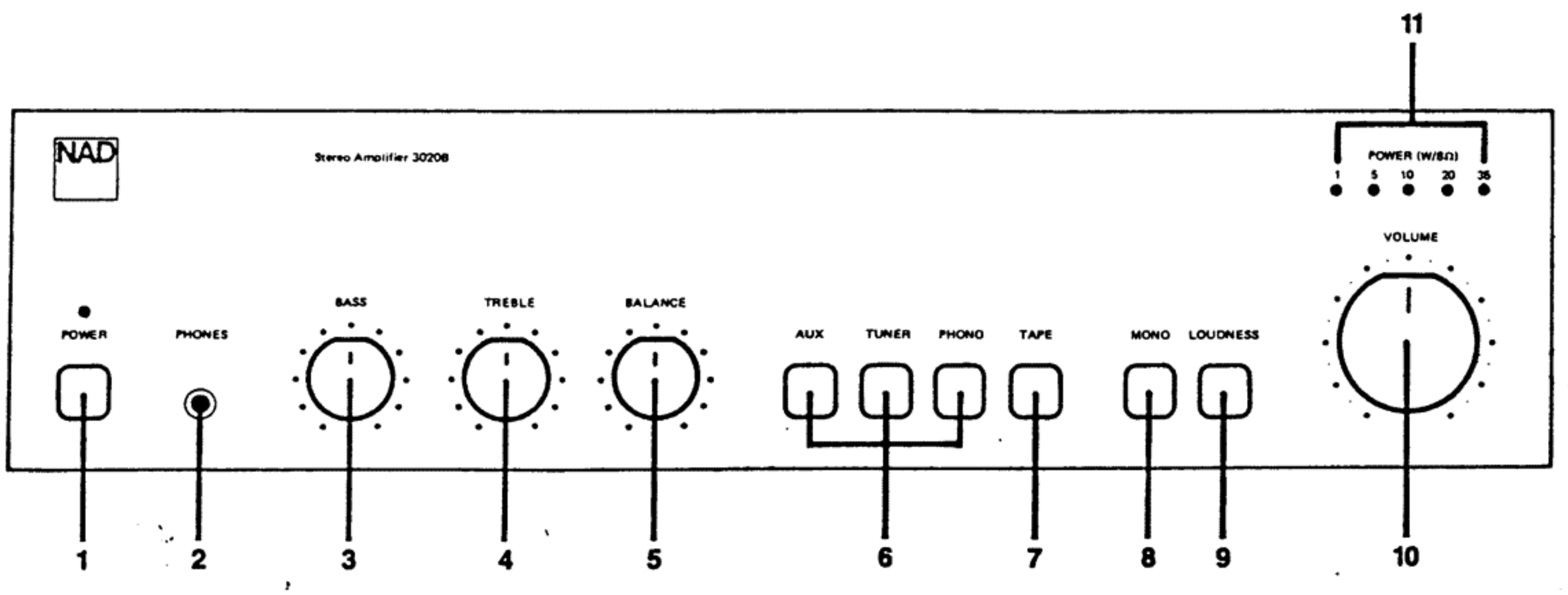

3120 FRONT PANEL CONTROLS

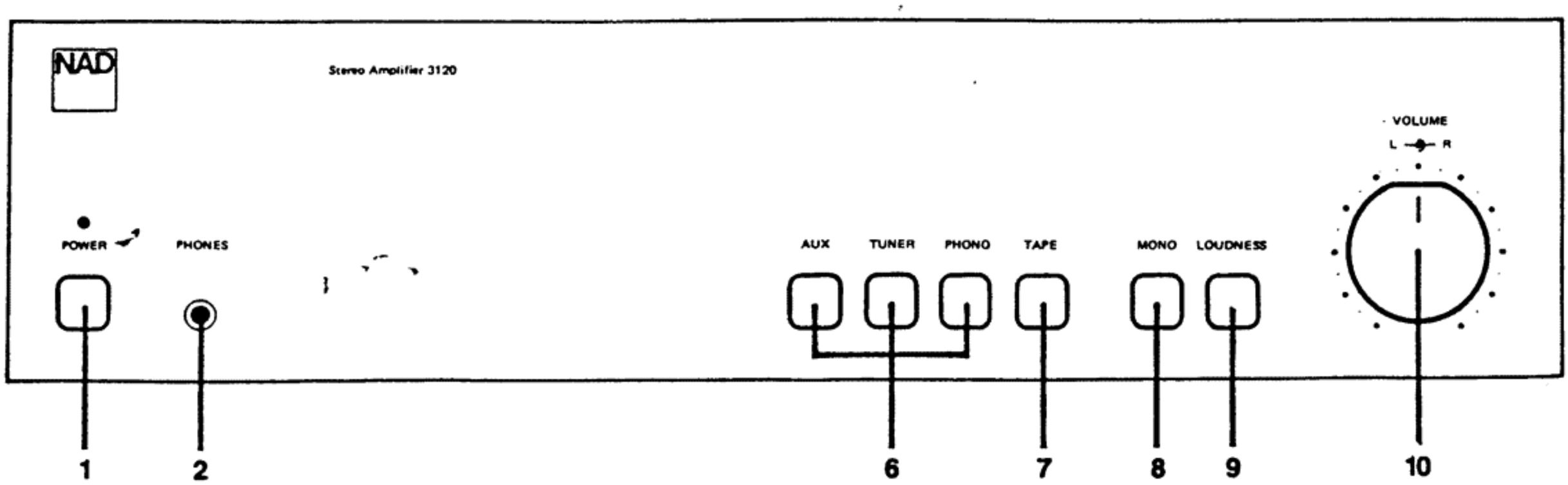

SPECIFICATIONS

POWER AMPLIFIER SECTION

Continuous average power output at 8 ohms (minimum RMS power per channel, both channels driven, with no more than the rated distortion)		25 W (14 dBW)
Rated distortion (THD) 20Hz–20 KHz		0.02%
Dynamic Headroom at 8 ohms		+3.0 dB
Dynamic power (maximum short-term power Per channel)		
	8 ohms	50W
	4 ohms	55 W
	2 ohms	70 W
T.H.D and SMPTE I.M, distortion from 250 mW to rated output		< 0.02%
IHF I.M. (CCIF IM) and T.I.M. distortion at rated output		< 0.02%
Input impedance	NORMAL input	11 Kohm
	LAB input	22 Kohm
Input sensitivity for 1 Watt/25 Watts out		200 mV/1.0V
Frequency Response, LAB Input		10 Hz–70 KHz
Audio bandpass filtering, NORMAL input		–3 dB at 15 Hz and 35 KHz, 12 dB/octave

PREAMPLIFIER SECTION

Phono input	
Input impedance	47 Kohm, 100 pF
Input Sensitivity (1 KHz) for 1 Watt/ 25 Watts out	MM 0.55 mV/2.7 mV MC 35 μV/180 μV
Signal-to-Noise Ratio with cartridge connected, A- weighted	MM 75 dB re 5 mV MC 73 dB re 0.5 mV
Input Overload	MM 250 mV MC 18 mV
RIAA Accuracy	± 0.5 dB
HIGH-LEVEL INPUTS (TUNER, AUX, TAPE)	
Input Impedance	20 kohm, 220 pF
Input Sensitivity for 1 W/25 Watts out	35 mV/180 mV
Signal-to-Noise ratio, A-weighted	90 dB re 1 W out 104 dB re 25 W out
Input Overload	> 25 V
Frequency Response	20Hz–20KHz ± 0.5 dB

PHYSICAL SPECIFICATIONS

Height	9.6 cm (3.8 in)
Width	42 cm (16.5 in)
Depth	24 cm (9.5 in)
Net Weight	5.26 Kg (11.6 lbs.)
Shipping Weight	6.7Kg (14.7 lbs.)
Power Consumption	50–60 Hz, 110–120 VAC 60 Hz, 220 VAC 50 Hz, 240 VAC 150 VA

INSIDE VIEW

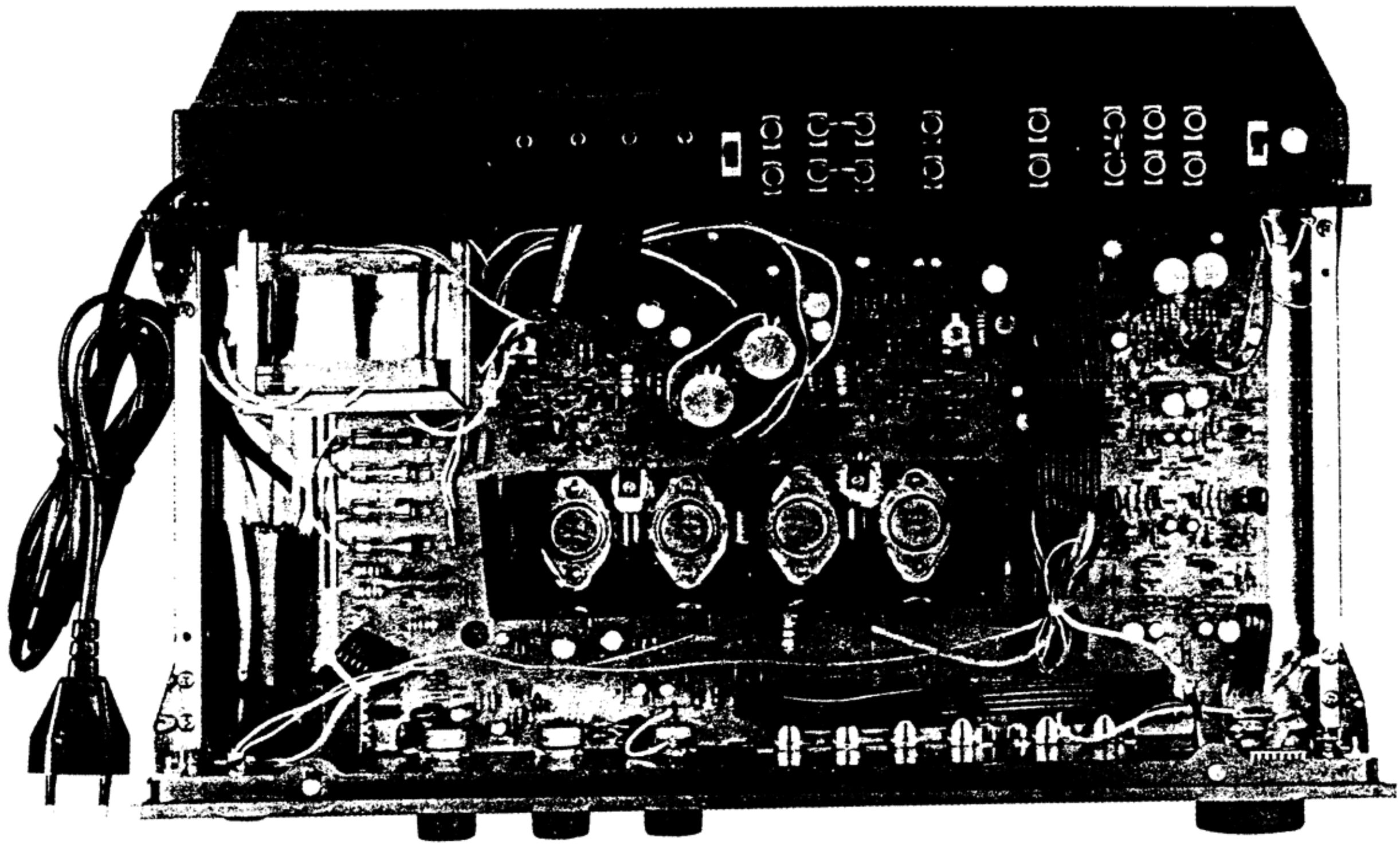

BLOCK DIAGRAM

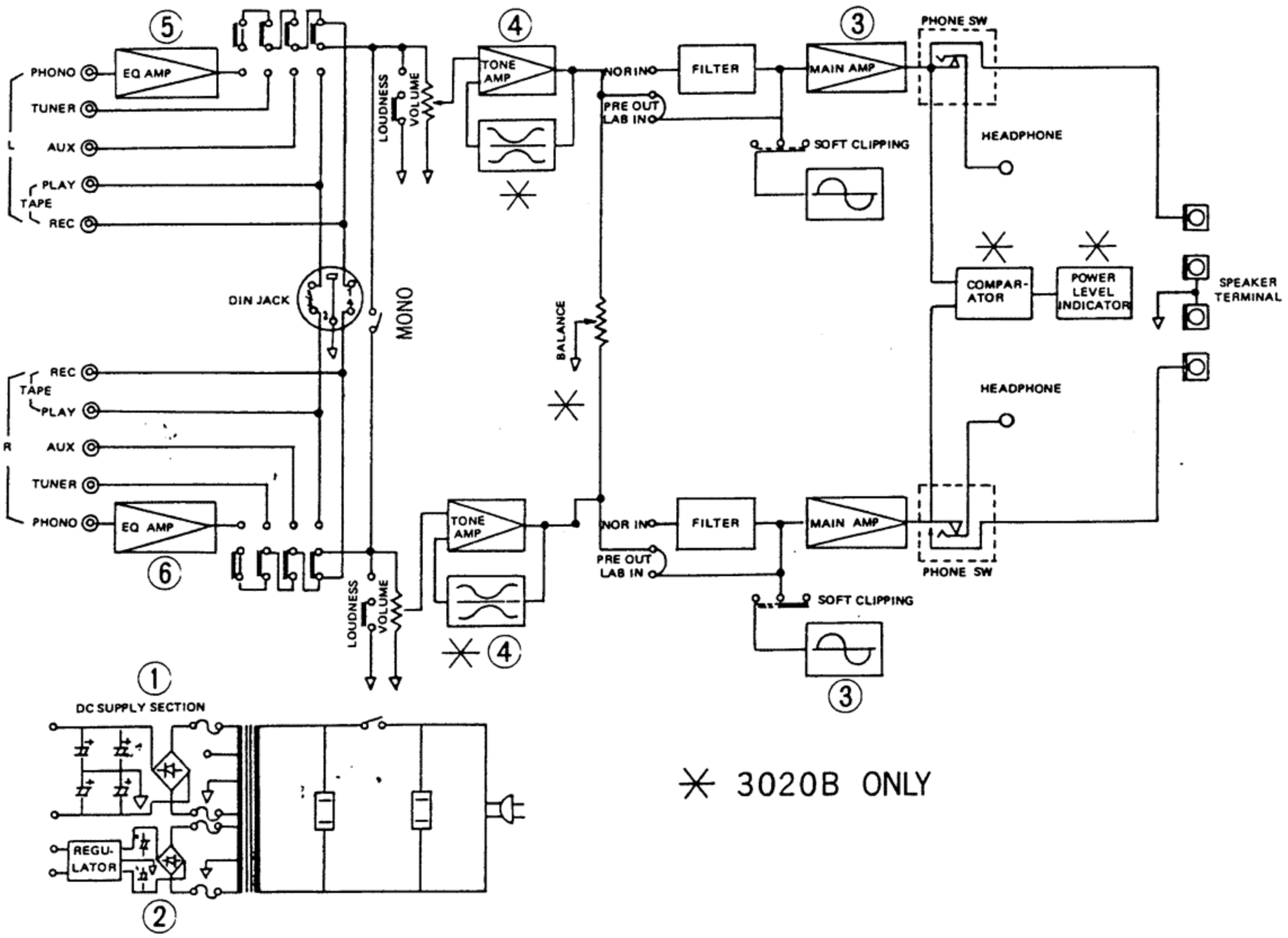

5. If within turn-on tolerances, allow unit to warm up for 5 minutes.
   The voltage should then be 30 mV, tolerances ± 10mV.
   IF NOT WITHIN TOLERANCES GO TO ADJUSTING!

6. If OK, reconnect the soldershorts across R 653 and R 654.

   Adjusting:

7. Turn off, remove bias adjusting resistors RX 1 (left) and RX 2 (right) and temporary replace with variable resistors 2 Kohms to 5 Kohms, set the variable resistors to maximum resistance.

8. Turn on and read voltage acress R 653 and R 654. It should be less than 10 mV. If too high, turn off unit immediately and check the output amplifier section, especially Q609-Q611-Q613-Q615-Q617 left channel or Q610-Q612-Q614-Q616-Q618 right channel.

9. If voltage is OK upon turn-on, adjust variable resistors to read approximately 12 mV on VOM. Leave unit on for 5 minutes and reset voltage to 30 mV. Note that it takes a little time for readings to stabilize.

10. Turn off and remove variable resistors and replace with fixed resistance with exatly the same measured value. Use resistors in series or paralell if necessary.

11. Recheck idling current.

12. Reinstall soldershorts across R 653 and R 654.

ALIGNMENT INSTRUCTIONS (continued)

Notes:

1. Failure to re-install soldershort across R653 and R 654 will result in failure at high volume.

2. Decreasing value of RX 1 and RX 2 will cause idling current to increase.

3. Too little idling current will cause "Crossouer" distortion. Too much idling current will result in overheating.

B DC OFFSET:

1. Set Volumecontrol to minimum, disconnect any outputloads.

2. Connect DMM or VOM across each channel's speaker terminals.

3. Turn on and read VOM. Reading should be 0 V.DC. Tolerance ± 50mV.
   Adjust VR 5 (left) or VR 6 (right) as necessary.

Notes:

1. Before adjusting VR 5 or VR 6 soften the lock paint with laquer thinner to avoid destroying them. Secure with lock paint (nail polish) when adjustment is completed.

2. Incorrect adjustment of DC offset can create pop when inserting/removing Headphone plug.

3. Offset more than 3 V is caused by defective parts, not by misadjustments.

3120 PCB PARTS LOCATION AND WIRING DIAGRAM

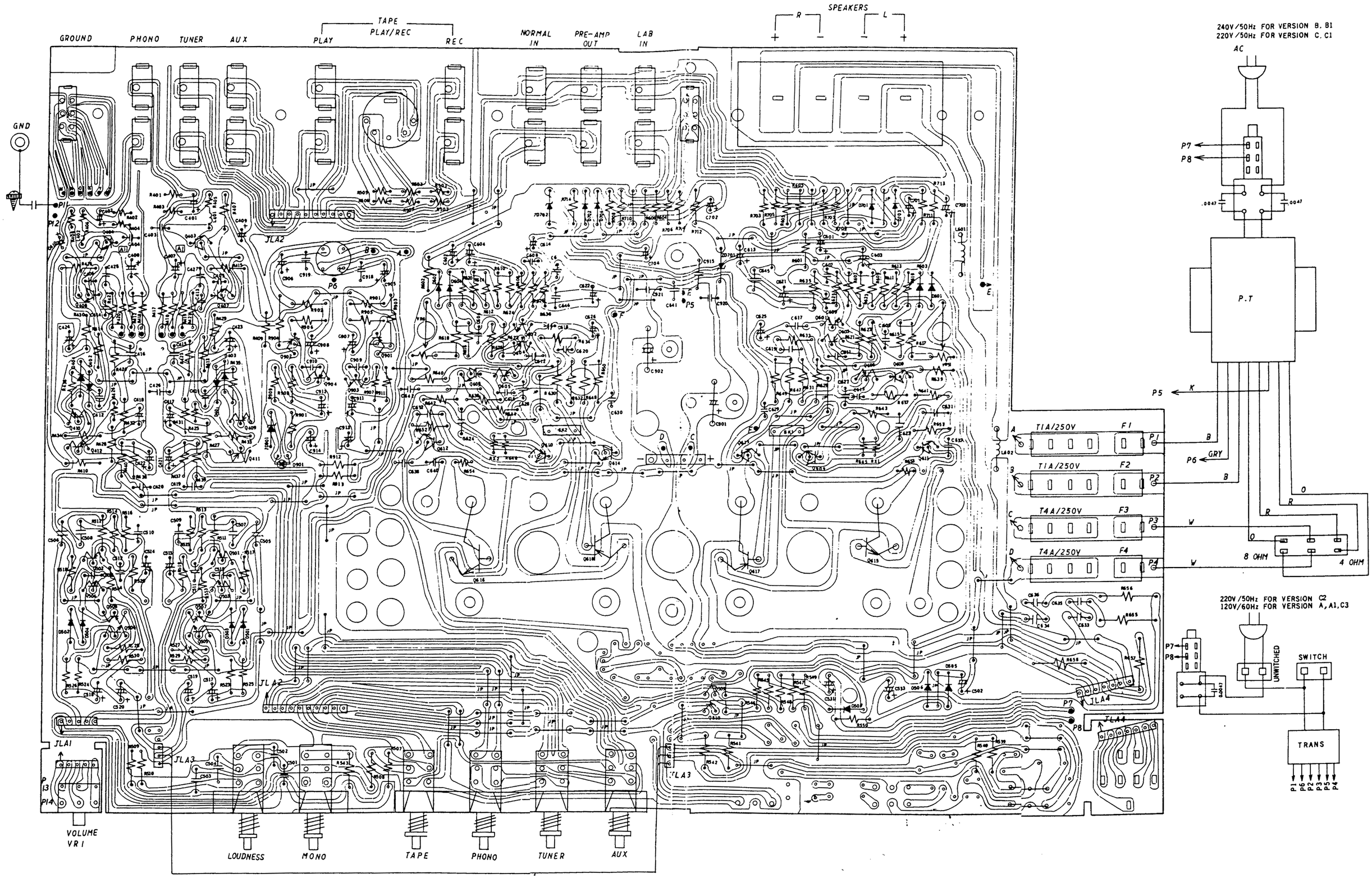

3120 SCHEMATIC DIAGRAM

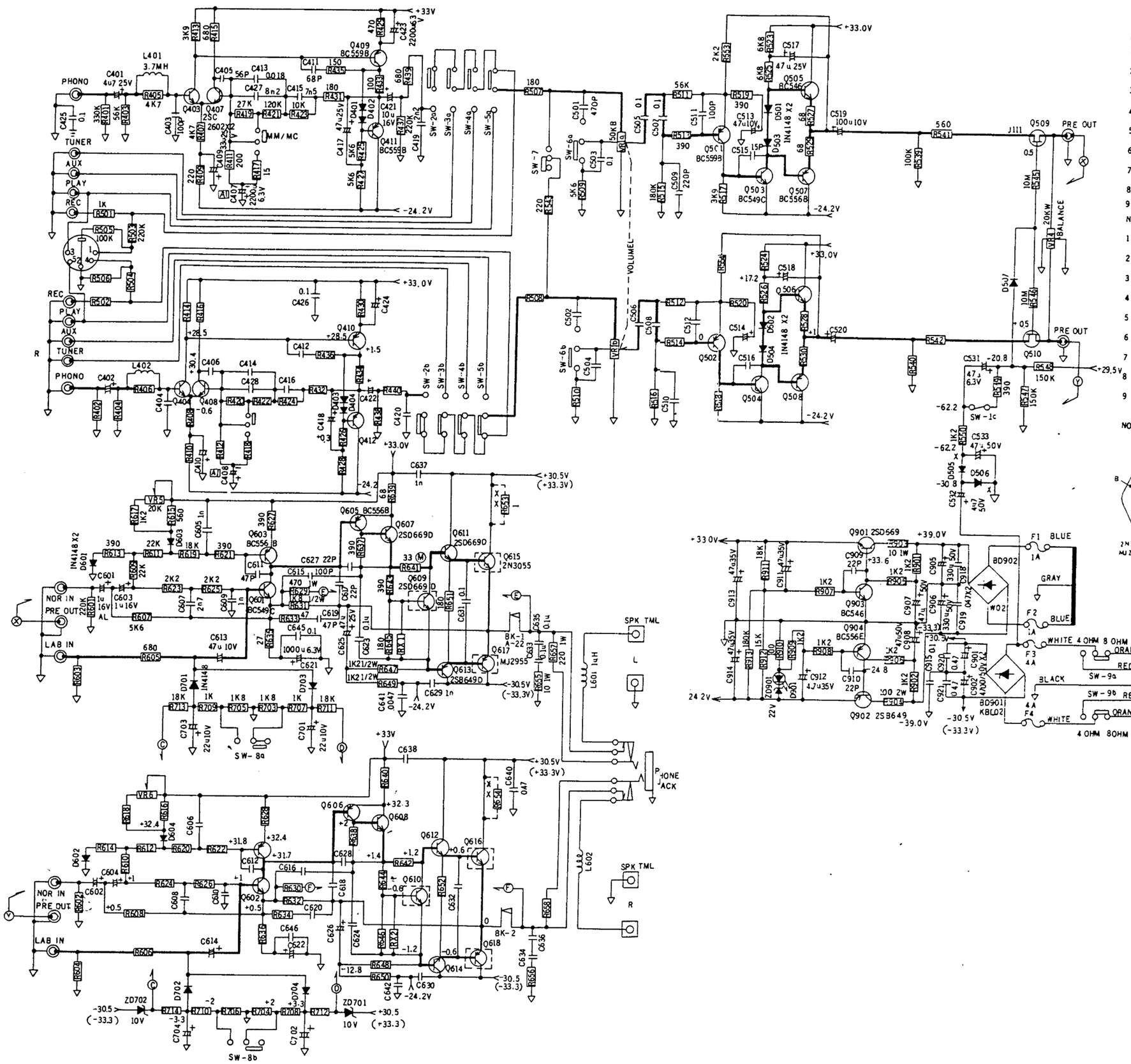

NOTES 1:

1 ALL RESISTORS ARE 1/4W±5% CARBON UNLESS OTHERWISE SPECIFIED.

2 ALL DIODES ARE 1N4148 UNLESS OTHERWISE SPECIFIED.

3 CAPACITANCE ARE IN uF UNLESS OTHERWISE SPECIFIED.

4 ⚡ MEANS RESISTOR WITH CERAMIC TUBE STAND UP ON THE P.C.B.

5 ⊏⊐ MEANS MOUNT ON COMMON HEAT SINK.

6 ⚡⚡ MEANS R653 R654 WILL BE SHORTED AFTER IDLE CURRENT ALIGNMENT.

7 THE VOLTAGE SHOWN ATEACH POINTS ARE TESTED ON STATIC CONDITON.

8 ALL SW ARE AT OFF POSITION. TURBO SW AT 4 OHM POSITION.

9 ( )MEANS TURBO SW AT 8 OHM POSITIOM.

NOTES 2:

1 SW-1 a.b.c : POWER SW.

2 SW-2 a.b : PHONO SW.

3 SW-3 a.b : TUNER SW.

4 SW-4 a.b : AUX SW.

5 SW-5 a.b : TAPE MONITOR SW.

6 SW-6 a.b : LOUDNESS SW.

7 SW-7 : MONO.

8 SW-8 a.b : SOFT CLIPPING.

9 SW-9 a.b : TURBO SW.

NOTE 4: FUSES RATING

FOR:	UL.CA S1.HK	SD.FL.DM UK.AS.IL EC.SA.
F1.F2: 1A/250V		T1A/250V
F3.F4: T4A/250V		T4A/250V

NOTES 3:

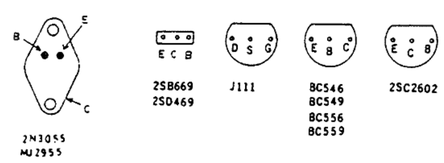

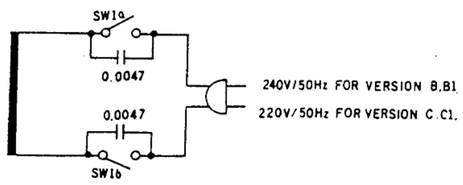

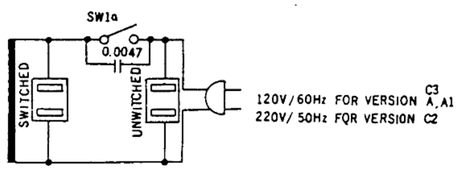

3120 PARTS LIST

SYMBOL NO.	PART NO.	DESCRIPTION	REF
R401	1003346227	Carbon res 330K ohm ±5% 1/4W	
R402	1003346227	Carbon res 330K ohm ±5% 1/4W	
R403	1005636229	Carbon res 56K ohm ±5% 1/4W	
R404	1005636229	Carbon res 56K ohm ±5% 1/4W	
R405	1004726225	Carbon res 4K7 ohm ±5% 1/4W	
R406	1004726225	Carbon res 4K7 ohm ±5% 1/4W	
R407	1004726232	Carbon res 4K7 ohm ±5% 1/4W	
R408	1004726225	Carbon res 4K7 ohm ±5% 1/4W	
R409	1002216234	Carbon res 220 ohm ±5% 1/4W	
R410	1002216234	Carbon res 220 ohm ±5% 1/4W	
R411	1002016237	Carbon res 200 ohm ±5% 1/4W	
R412	1002016237	Carbon res 200 ohm ±5% 1/4W	
R413	1003926237	Carbon res 3K9 ohm ±5% 1/4W	
R414	1003926237	Carbon res 3K9 ohm ±5% 1/4W	
R415	1006816237	Carbon res 680 ohm ±5% 1/4W	
R416	1006816237	Carbon res 680 ohm ±5% 1/4W	
R417	1001506238	Carbon res 15 ohm ±5% 1/4W	
R418	1001506238	Carbon res 15 ohm ±5% 1/4W	
R419	1002735236	Carbon res 27K ohm ±2% 1/4W	
R420	1002735236	Carbon res 27K ohm ±2% 1/4W	
R421	1001245230	Carbon res 120K ohm ±2% 1/4W	
R422	1001245230	Carbon res 120K ohm ±2% 1/4W	
R423	1001035238	Carbon res 10K ohm ±2% 1/4W	
R424	1001035238	Carbon res 10K ohm ±2% 1/4W	
R425	1005626224	Carbon res 5K6 ohm ±5% 1/4W	
R426	1005626224	Carbon res 5K6 ohm ±5% 1/4W	
R427	1005626231	Carbon res 5K6 ohm ±5% 1/4W	
R428	1005626231	Carbon res 5K6 ohm ±5% 1/4W	
R429	1005616237	Carbon res 560 ohm ±5% 1/4W	
R430	1005616237	Carbon res 560 ohm ±5% 1/4W	
R431	1001816233	Carbon res 180 ohm ±5% 1/4W	
R432	1001816233	Carbon res 180 ohm ±5% 1/4W	
R433	1001516232	Carbon res 150 ohm ±5% 1/4W	
R434	1001516232	Carbon res 150 ohm ±5% 1/4W	
R435	1001516232	Carbon res 150 ohm ±5% 1/4W	
R436	1001516232	Carbon res 150 ohm ±5% 1/4W	
R437	1002246238	Carbon res 220K ohm ±5% 1/4W	
R438	1002246238	Carbon res 220K ohm ±5% 1/4W	
R439	1006816237	Carbon res 680 ohm ±5% 1/4W	
R440	1006816237	Carbon res 680 ohm ±5% 1/4W	
R501	1001026221	Carbon res 1K ohm ±5% 1/4W	
R520	1001026221	Carbon res 1K ohm ±5% 1/4W	
R503	1002246221	Carbon res 220K ohm ±5% 1/4W	
R504	1002246221	Carbon res 220K ohm ±5% 1/4W	
R505	1001046221	Carbon res 100K ohm ±5% 1/4W	
R506	1001046221	Carbon res 100K ohm ±5% 1/4W	
R507	1001816233	Carbon res 180 ohm ±5% 1/4W	
R508	1001816233	Carbon res 180 ohm ±5% 1/4W	
R509	1005626231	Carbon res 5K6 ohm ±5% 1/4W	
R510	1005626231	Carbon res 5K6 ohm ±5% 1/4W	
R511	1005636236	Carbon res 56K ohm ±5% 1/4W	
R512	1005636236	Carbon res 56K ohm ±5% 1/4W	
R513	1003916232	Carbon res 390 ohm ±5% 1/4W	
R514	1003916232	Carbon res 390 ohm ±5% 1/4W	

SYMBOL NO.	PART NO.	DESCRIPTION	REF
R515	1001846237	Carbon res 180K ohm ±5% 1/4W	
R516	1001846237	Carbon res 180K ohm ±5% 1/4W	
R517	1003926237	Carbon res 3K9 ohm ±5% 1/4W	
R518	1003926237	Carbon res 3K9 ohm ±5% 1/4W	
R519	1003916232	Carbon res 390 ohm ±5% 1/4W	
R520	1003916232	Carbon res 390 ohm ±5% 1/4W	
R521	Not Used		
R522	Not Used		
R523	1006826231	Carbon res 6K8 ohm ±5% 1/4W	
R524	1006826231	Carbon res 6K8 ohm ±5% 1/4W	
R525	1006826231	Carbon res 6K8 ohm ±5% 1/4W	
R526	1006826231	Carbon res 6K8 ohm ±5% 1/4W	
R527	1006806232	Carbon res 68 ohm ±5% 1/4W	
R528	1006806232	Carbon res 68 ohm ±5% 1/4W	
R529	1006806232	Carbon res 68 ohm ±5% 1/4W	
R530	1006806232	Carbon res 68 ohm ±5% 1/4W	
R539	1001046238	Carbon res 100K ohm ±5% 1/4W	
R540	1001046238	Carbon res 100K ohm ±5% 1/4W	
R541	1005616257	Carbon res 560 ohm ±5% 1/4W	
R542	1005616237	Carbon res 560 ohm ±5% 1/4W	
R543	1002216234	Carbon res 220 ohm ±5% 1/4W	
R544	Not Used		
R545	1001066237	Carbon res 10M ohm ±5% 1/4W	
R546	1001066237	Carbon res 10M ohm ±5% 1/4W	
R547	1001546236	Carbon res 150K ohm ±5% 1/4W	
R548	1001046238	Carbon res 100K ohm ±5% 1/4W	
R549	1003916232	Carbon res 390 ohm ±5% 1/4W	
R550	1001226236	Carbon res 1K2 ohm ±5% 1/4W	
R553	1002226239	Carbon res 2K2 ohm ±5% 1/4W	
R554	1C02226239	Carbon res 2K2 ohm ±5% 1/4W	
R601	1002246238	Carbon res 220K ohm ±5% 1/4W	
R602	1002246238	Carbon res 220K ohm ±5% 1/4W	
R603	1002246238	Carbon res 220K ohm ±5% 1/4W	
R604	1002246238	Carbon res 220K ohm ±5% 1/4W	
R605	1006816237	Carbon res 680 ohm ±5% 1/4W	
R606	1006816237	Carbon res 680 ohm ±5% 1/4W	
R607	1005626231	Carbon res 5K6 ohm ±5% 1/4W	
R608	1005626231	Carbon res 5K6 ohm ±5% 1/4W	
R609	1002236233	Carbon res 22K ohm ±5% 1/4W	
R610	1002236233	Carbon res 22K ohm ±5% 1/4W	
R611	1002236233	Carbon res 22K ohm ±5% 1/4W	
R612	1002236233	Carbon res 22K ohm ±5% 1/4W	
R613	1003916232	Carbon res 390 ohm ±5% 1/4W	
R614	1003916232	Carbon res 390 ohm ±5% 1/4W	
R615	1005616237	Carbon res 560 ohm ±5% 1/4W	
R616	1005616237	Carbon res 560 ohm ±5% 1/4W	
R617	1001226236	Carbon res 1K2 ohm ±5% 1/4W	
R618	1001226236	Carbon res 1K2 ohm ±5% 1/4W	
R619	1001836232	Carbon res 18K ohm ±5% 1/4W	
R620	1001836232	Carbon res 18K ohm ±5% 1/4W	
R621	1003916232	Carbon res 390 ohm ±5% 1/4W	
R622	1003916232	Carbon res 390 ohm ±5% 1/4W	
R623	1002226239	Carbon res 2K2 ohm ±5% 1/4W	
R624	1002226239	Carbon res 2K2 ohm ±5% 1/4W	

SYMBOL NO.	PART NO.	DESCRIPTION	REF
R625	1002226239	Carbon res 2K2 ohm ±5% 1/4W	
R626	1002226239	Carbon res 2K2 ohm ±5% 1/4W	
R627	1006806232	Carbon res 390 ohm ±5% 1/4W	
R628	1006806232	Carbon res 390 ohm ±5% 1/4W	
R629	1004716416	Carbon res 470 ohm ±5% 1W	
R630	1004716416	Carbon res 470 ohm ±5% 1W	
R631	1001826310	Carbon res 1K8 ohm ±5% 1/2W	
R632	1001826310	Carbon res 1K8 ohm ±5% 1/2W	
R633	1004706233	Carbon res 47 ohm ±5% 1/4W	
R634	1004706233	Carbon res 47 ohm ±5% 1/4W	
R635	1002706238	Carbon res 27 ohm ±5% 1/4W	
R636	1002606238	Carbon res 27 ohm ±5% 1/4W	
R637	1003916232	Carbon res 390 ohm ±5% 1/4W	
R638	1003916232	Carbon res 390 ohm ±5% 1/4W	
R639	1006806232	Carbon res 68 ohm ±5% 1/4W	
R640	1006806232	Carbon res 68 ohm ±5% 1/4W	
R641	1043306233	Carbon res 33 ohm ±5% 1/4W	
R642	1043306233	Carbon res 33 ohm ±5% 1/4W	
R643	1003916232	Carbon res 390 ohm ±5% 1/4W	
R644	1003916232	Carbon res 390 ohm ±5% 1/4W	
R645	1001816226	Carbon res 180 ohm ±5% 1/4W	
R646	1001816226	Carbon res 180 ohm ±5% 1/4W	
R647	1001226318	Carbon res 1K2 ohm ±5% 1/2W	
R648	1001226318	Carbon res 1K2 ohm ±5% 1/2W	
R649	1001226318	Carbon res 1K2 ohm ±5% 1/2W	
R650	1002226318	Carbon res 1K2 ohm ±5% 1/2W	
R651	1005616237	Carbon res 560 ohm ±5% 1/4W	
R652	1005616237	Carbon res 560 ohm ±5% 1/4W	
R653	1000106223	Carbon res 1 ohm ±5% 1/4W	
R654	1000106223	Carbon res 1 ohm ±5% 1/4W	
R655	1001006418	Carbon res 10 ohm ±5% 1W	
R656	1001006418	Carbon res 10 ohm ±5% 1W	
R657	1002216412	Carbon res 220 ohm ±5% 1W	
R658	1002216412	Carbon res 220 ohm ±5% 1W	
R703	1001826238	Carbon res 1K8 ohm ±5% 1/4W	
R704	1001836238	Carbon res 1K8 ohm ±5% 1/4W	
R705	1001836238	Carbon res 1K8 ohm ±5% 1/4W	
R706	1001836238	Carbon res 1K8 ohm ±5% 1/4W	
R707	1001226236	Carbon res 1K2 ohm ±5% 1/4W	
R708	1001226236	Carbon res 1K2 ohm ±5% 1/4W	
R709	1001226236	Carbon res 1K2 ohm ±5% 1/4W	
R710	1001226236	Carbon res 1K2 ohm ±5% 1/4W	
R711	1001836232	Carbon res 18K ohm ±5% 1/4W	
R712	1001836232	Carbon res 18K ohm ±5% 1/4W	
R713	1001836232	Carbon res 18K ohm ±5% 1/4W	
R714	1001836232	Carbon res 18K ohm ±5% 1/4W	
R901	1001226236	Carbon res 1K2 ohm ±5B 1/4W	
R902	1001226236	Carbon res 1K2 ohm ±5% 1/4W	
R903	1001006418	Carbon res 10 ohm ±5% 1W	
R904	1001016519	Carbon res 100 ohm ±5% 2W	
R905	1001226236	Carbon res 1K2 ohm ±5% 1/4W	
R906	1001226236	Carbon res 1K2 ohm ±5% 1/4W	
R907	1001226236	Carbon res 1K2 ohm ±5% 1/4W	
R908	1001226236	Carbon res 1K2 ohm ±5% 1/4W	

SYMBOL NO.	PART NO.	DESCRIPTION			REF
R909	1001226236	Carbon res 1K2 ohm ±5% 1/4W			
R910	1001016234	Carbon res 100 ohm ±5% 1/4W			
R911	1001836232	Carbon res 18K ohm ±5% 1/4W			
R912	1001536231	Carbon res 15K ohm ±5% 1/4W			
R913	1001846237	Carbon res 180K ohm ±5% 1/4W			
C401	160475500601	Elec.	Capa.	4.7μF +50–10% 50V	
C402	160475500601	Elec.	Capa.	4.7μF ±50–10% 50V	
C403	166101647021	Ceramic	Capa.	100PF ±10% 50WV	
C404	166101647021	Ceramic	Capa.	100PF ±10% 50WV	
C405	166560647029	Ceramic	Capa.	100PF ±10% 50WV	
C406	166560647029	Ceramic	Capa.	100PF ±10% 50WV	
C407	160228063605	Elec.	Capa.	2200μF +50–10% 6.3V	
C408	160228063605	Elec.	Capa.	2200μF +50–10% 6.3V	
C409	160336250603	Elec.	Capa.	33μF +50–10% 25V	
C410	160336250603	Elec.	Capa.	33μF +50–10% 25V	
C411	166680647029	Ceramic	Capa.	68PF ±10% 50WV	
C412	166680647029	Ceramic	Capa.	68PF ±10% 50WV	
C413	162183524	Mylar	Capa.	0.018μF ±50% 50WV	
C414	162183524	Mylar	Capa.	0.018μF ±50% 50WV	
C415	162752525	Ceramic	Capa.	0.0075μF ±50% 50WV	
C416	162752525	Ceramic	Capa.	0.0075μF ±50% 50WV	
C417	160476250605	Elec.	Capa.	47μF +50–10% 25V	
C418	160476250605	Elec.	Capa.	47μF +50–10% 25V	
C419	162222521	Ceramic	Capa.	0.0022μF ±50% 50WV	
C420	162222521	Ceramic	Capa.	0.0022μF ±50% 50WV	
C421	160106160608	Elec.	Capa.	10μF +50–10% 16V	
C422	160106160608	Elec.	Capa.	10μF +50–10% 16V	
C423	160227100604	Elec.	Capa.	220μF +50–10% 10V	
C424	160227100604	Elec.	Capa.	220μF +50–10% 10V	
C425	167104800021	Ceramic	Capa.	0.1μF +80–20% 50WV	
C426	167104800021	Ceramic	Capa.	0.1μF +80–20% 50WV	
C427	162822527	Ceramic	Capa.	0.0082μF ±5% 50WV	
C428	162822527	Ceramic	Capa.	0.0082μF ±5% 50WV	
C501	166471547029	Ceramic	Capa.	470PF ±5% 50WV	
C502	166471547029	Ceramic	Capa.	470PF ±5% 50WV	
C503	162104520	Ceramic	Capa.	0.1μF ±5% 50WV	
C504	162104520	Ceramic	Capa.	0.1μF ±5% 50WV	
C505	162104520	Ceramic	Capa.	0.1μF ±5% 50WV	
C506	162104520	Ceramic	Capa.	0.1μF ±5% 50WV	
C507	162104520	Ceramic	Capa.	0.1μF ±5% 50WV	
C508	162104520	Ceramic	Capa.	0.1μF ±5% 50WV	
C509	166221647021	Ceramic	Capa.	220PF ±10% 50WV	
C510	166221647021	Ceramic	Capa.	220PF ±10% 50WV	
C511	166101647021	Ceramic	Capa.	100PF ±10% 50WV	
C512	166101647021	Ceramic	Capa.	100PF ±10% 50WV	
C513	160476100603	Elec.	Capa.	47μF +50–10% 10V	
C514	160476100603	Elec.	Capa.	47μF +50–10% 10V	
C515	166150647024	Ceramic	Capa.	15pF ±10% 50WV	
C516	166150647024	Ceramic	Capa.	15PF ±10% 50WV	
C517	160476250605	Elec.	Capa.	47μF +50–10% 25V	
C518	160476250605	Elec.	Capa.	47μF +50–10% 25V	
C519	160107100604	Elec.	Capa.	100μF +50–10% 10V	
C520	160107100604	Elec.	Capa.	100μF +50–10% 10V	

SYMBOL NO.	PART NO.	DESCRIPTION			REF
C531	160476610607	Elec.	Capa.	4.7μF +50–10% 100V	
C532	160475500601	Elec.	Capa.	4.7μF +50–10% 50V	
C533	160476500605	Elec.	Capa.	47μF +50–10% 50V	
C601	160105500699	Elec.	Capa.	1μF +75–10% 50V	
C602	160105500699	Elec.	Capa.	1μF +75–10% 50V	
C603	160105500699	Elec.	Capa.	1μF +75–10% 50V	
C604	160105500699	Elec.	Capa.	1μF +75–10% 50V	
C605	162102521	Mylar	Capa.	0.001μF ±5% 50WV	
C606	162102521	Mylar	Capa.	0.001μF ±5% 50WV	
C607	162272529	Mylar	Capa.	0.0027μF ±5% 50WV	
C608	162272529	Mylar	Capa.	0.0027μF ±5% 50WV	
C609	162102521	Mylar	Capa.	0.001μF ±5% 50WV	
C610	162102521	Mylar	Capa.	0.001μF ±5% 50WV	
C611	166470647020	Ceramic	Capa.	47PF ±10% 50WV	
C612	166470647020	Ceramic	Capa.	47PF ±10% 50WV	
C613	160476100603	Elec.	Capa.	47μF +50–10% 10V	
C614	160476100603	Elec.	Capa.	47μF +50–10% 10V	
C615	166101647021	Ceramic	Capa.	100PF ±10% 50WV	
C616	166101647021	Ceramic	Capa.	100PF ±10% 50WV	
C617	166220647026	Ceramic	Capa.	22PF ±10% 50WV	
C618	166220647026	Ceramic	Capa.	22PF ±10% 50WV	
C619	166470647020	Ceramic	Capa.	47PF ±10% 50WV	
C620	166470647020	Ceramic	Capa.	47PF ±10% 50WV	
C621	160108100609	Elec.	Capa.	1000μF +50–10% 10V	
C622	160108100609	Elec.	Capa.	1000μF +50–10% 10V	
C623	162104520	Ceramic	Capa.	0.1μF ±5% 50WV	
C624	162104520	Ceramic	Capa.	0.1μF ±5% 50WV	
C625	160476250605	Elec.	Capa.	47μF +50–10% 25V	
C626	160476250605	Elec.	Capa.	47μF +50–10% 25V	
C627	166220647026	Ceramic	Capa.	22PF ±10% 50WV	
C628	166220647026	Ceramic	Capa.	22PF ±10% 50WV	
C629	162102521	Mylar	Capa.	0.001μF ±5% 50WV	
C630	162102521	Mylar	Capa.	0.001μF ±5% 50WV	
C631	162104520	Ceramic	Capa.	0.1μF ±5% 50WV	
C632	162104520	Ceramic	Capa.	0.1μF ±5% 50WV	
C633	167104800021	Ceramic	Capa.	0.1μF +80–20% 50WV	
C634	167104800021	Ceramic	Capa.	0.1μF +80–20% 50WV	
C635	167104800021	Ceramic	Capa.	0.1μF +80–20% 50WV	
C636	167104800021	Ceramic	Capa.	0.1μF +80–20% 50WV	
C637	162102521	Mylar	Capa.	0.001μF ±5% 50WV	
C638	162102521	Mylar	Capa.	0.001μF ±5% 50WV	
C639	Not Used		Capa.		
C640	167473800020	Ceramic	Capa.	0.047μF +80–20% 50WV	
C641	167472800025	Ceramic	Capa.	0.0047μF +80–20% 50WV	
C642	167472800025	Ceramic	Capa.	0.0047μF +80–20% 50WV	
C645	167104800021	Ceramic	Capa.	0.1μF +80–20% 50WV	
C646	167104800021	Ceramic	Capa.	0.1μF +80–20% 50WV	
C701	160226100600	Elec.	Capa.	22μF +50–10% 10V	
C702	160226100600	Elec.	Capa.	22μF +50–10% 10V	
C703	160226100600	Elec.	Capa.	22μF +50–10% 10V	
C704	160226100600	Elec.	Capa.	22μF +50–10% 10V	
C901	160478500604	Elec.	Capa.	4700μF +50–10% 50V	
C902	160478500604	Elec.	Capa.	4700μF +50–10% 50V	
C905	160337500602	Elec.	Capa.	330μF +50–10% 50V	

SYMBOL NO.	PART NO.	DESCRIPTION			REF
C906	160337500602	Elec.	Capa.	330μF +50–10% 50V	
C907	160476500605	Elec.	Capa.	47μF +50–10% 50V	
C908	160476500605	Elec.	Capa.	47μF +50–10% 50V	
C909	166220647026	Ceramic	Capa.	22PF ±10% 50WV	
C910	166220647026	Ceramic	Capa.	22PF ±10% 50WV	
C911	160475500601	Elec.	Capa.	4.7μF +50–10% 50V	
C912	160475500601	Elec.	Capa.	4.7μF +50–10% 50V	
C913	160476350606	Elec.	Capa.	47μF +50–10% 35V	
C914	160476350606	Elec.	Capa.	47μF +50–10% 35V	
C915	167104800021	Ceramic	Capa.	0.1μF +80–20% 50WV	
C918	167473800020	Ceramic	Capa.	0.047μF ±10% 50WV	
C919	167473800020	Ceramic	Capa.	0.047μF ±10% 50WV	
C920	167473800020	Ceramic	Capa.	0.047μF ±10% 50WV	
C921	167473800020	Ceramic	Capa.	0.047μF ±10% 50WV	
L401	35400020019	Coil Toroidal 3.7mH			
L402	35400020019	Coil Tordidal 3.7mH			
L601	35500140016	Coil Spring 1μH			
L602	35500140016	Coil Spring 1μH			
D401	270041480007	Diode 1N4148			
D402	270041480007	Diode 1N4148			
D403	270041480007	Diode 1N4148			
D404	270041480007	Diode 1N4148			
D501	270041480007	Diode 1N4148			
D502	270041480007	Diode 1N4148			
D503	270041480007	Diode 1N4148			
D504	270041480007	Diode 1N4148			
D505	270041480007	Diode 1N4148			
D506	270041480007	Diode 1N4148			
D507	270041480007	Diode 1N4148			
D601	270041480007	Diode 1N4148			
D602	270041480007	Diode 1N4148			
D603	270041480007	Diode 1N4148			
D604	270041480007	Diode 1N4148			
D701	270041480007	Diode 1N4148			
D702	270041480007	Diode 1N4148			
D703	270041480007	Diode 1N4148			
D704	270041480007	Diode 1N4148			
D901	26301302042	LED RED 3.0φ			
ZD701	273000100525	Zener Diode 10BM			
ZD702	273000100525	Zener Diode 10BM			
ZD901	273000220425	Zener Diode 22BH			
Q403, Q404	260032602066	2SC2602F		Transistor	
	260032602075	or 2SC2602G		Transistor	
Q407, Q408	260032602066	2SC1602F		Transistor	
	260032602075	or 2SC2602G		Transistor	
Q409, Q410	260180559029	BC559B		Transistor	
	260180556027	or BC556B		Transistor	
Q411, Q412	260180559029	BC559B		Transistor	
	260180556027	or BC556B		Transistor	
Q501, Q502	260180559029	BC559B		Transistor	
	260180556027	or BC556B		Transistor	
Q503, Q504	260180549031	BC549C		Transistor	
Q505, Q506	260180546011	BD546A		Transistor	
Q507, Q508	260180556027	BC556B		Transistor	

SYMBOL NO.	PART NO.	DESCRIPTION		REF
Q509, Q510	262000001112	FET E(J) 111	Transistor	
Q601, Q602	260180549031	BC549C	Transistor	
Q603, Q604	260180556027	BC556B	Transistor	
Q605, Q606	260180556027	BC556B	Transistor	
Q607, Q608	260040669032	2SD669C	Transistor	
	260040669041	or 2SC669D	Transistor	
	260040669598	or 2SD669AC	Transistor	
	260040669604	or 2SD669AD	Transistor	
Q609, Q610	260040669032	2SD669C	Transistor	
	260040669041	or 2SD669D	Transistor	
	260040669598	or 2SD669AC	Transistor	
	260040669694	or 2SD669AD	Transistor	
Q611, Q612	260040669032	2SD669C	Transistor	
	260040669041	or 2SD669D	Transistor	
	260040669598	or 2SD669AC	Transistor	
	260040669604	or 2SD669AD	Transistor	
Q613, Q614	260020649032	2SB649C	Transistor	
	260020649041	or 2SB649D	Transistor	
	260020649598	or 2SB649AC	Transistor	
	260020649604	or 2SB649AD	Transistor	
Q615, Q616	260093055009	2N3055	Transistor	
Q617, Q618	260222955003	MJ2955	Transistor	
Q901	260040669032	2SD669C	Transistor	
	260040669041	or 2SD669D	Transistor	
	260040669598	or 2SD669AC	Transistor	
	260040669604	or 2SD669AD	Transistor	
Q902	260020649032	2SB649C	Transistor	
	260020649041	or 2SB649D	Transistor	
	260020649598	or 2SB649AC	Transistor	
	260020649604	or 2SB649AD	Transistor	
Q903	260180546011	BC546A	Transistor	
Q904	260180556027	BC556B	Transistor	
Slide SW	43100200019	Slide SW		
Slide SW	43100310019	Slide SW		
Push SW	43200160019	Push SW		
Push SW	43200180010	Push SW		
VR	12000240011	50KB		
Semi VR	12700110021	20K 10¢		
Semi VR	12700110021	20K 10¢		

PACKING DIAGRAM

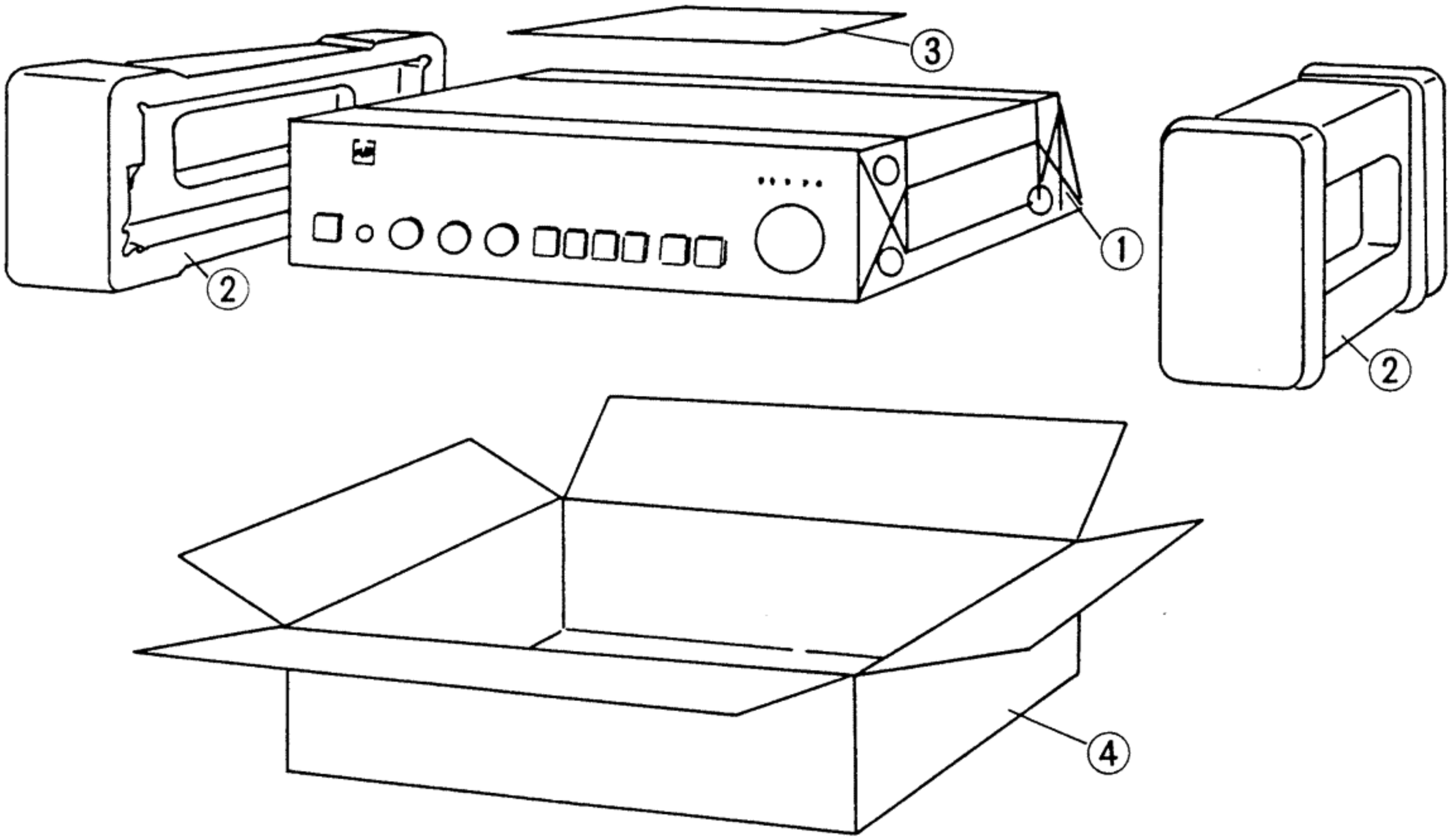

Item	Number	Name	Q'ty
1	83145970014	Bag Poly	1
2	82525610019	Box Snow	2
3	871003020017	IB	1
4	80046341059	Carton Individual	1

3020B Packing Diagram (Different Packing From 3120B)

Item	Number	Name	Q'ty
3	871003020026	IB	1
4	80046340028	Carton Individual	1