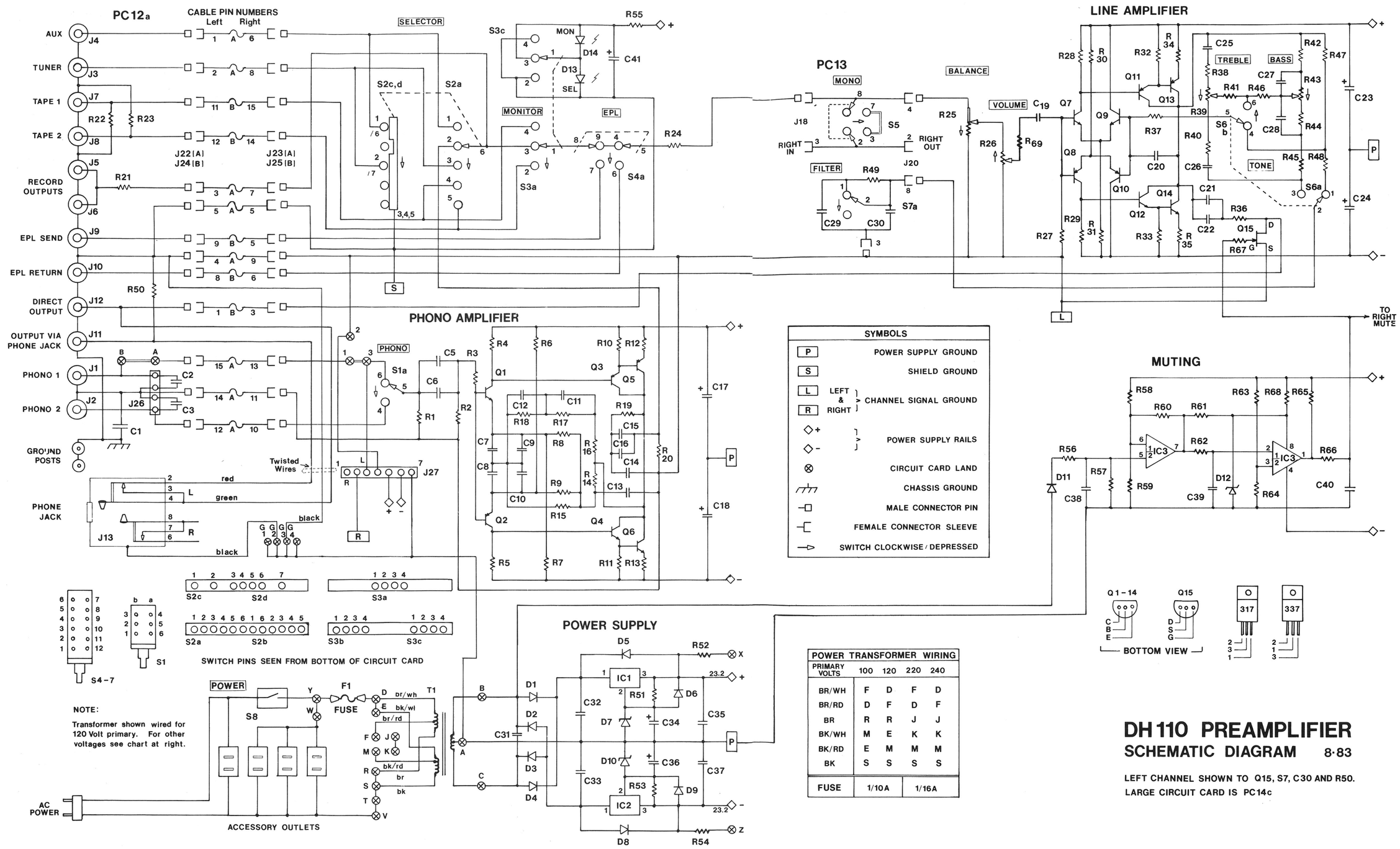

NOTE:

Transformer shown wired for 120 Volt primary. For other voltages see chart at right.

SYMBOLS

P	POWER SUPPLY GROUND
S	SHIELD GROUND
L, R (LEFT & RIGHT)	CHANNEL SIGNAL GROUND
◇+, ◇-	POWER SUPPLY RAILS
⊗	CIRCUIT CARD LAND
	CHASSIS GROUND
	MALE CONNECTOR PIN
	FEMALE CONNECTOR SLEEVE
	SWITCH CLOCKWISE / DEPRESSED

CABLE PIN ASSIGNMENTS

J22 TO J23; A PIN

1 AUX L
2 TUNER L
3 RECORD L
4 LINE GND L
5 SHIELD GND
6 AUX R
7 RECORD R
8 TUNER R
9 LINE GND R
10 PHONO 2 R
11 PHONO GND R
12 PHONO 2 L
13 PHONO 1 R
14 PHONO GND L
15 PHONO 1 L

J24 TO J25; B PIN

1 OUT LINE L
2 SHIELD
3 OUT LINE R
4 SHIELD
5 EPL SEND R
6 EPL RETURN R
7 SHIELD
8 EPL RETURN L
9 EPL SEND L
10 SHIELD
11 TAPE 1 L
12 TAPE 2 L
13 SHIELD
14 TAPE 2 R
15 TAPE 1 R

POWER TRANSFORMER WIRING

PRIMARY VOLTS	100	120	220	240
BR/WH	F	D	F	D
BR/RD	D	F	D	F
BR	R	R	J	J
BK/WH	M	E	K	K
BK/RD	E	M	M	M
BK	S	S	S	S
FUSE	1/10A		1/16A	

DH 110 PREAMPLIFIER
SCHEMATIC DIAGRAM 8·83

LEFT CHANNEL SHOWN TO Q15, S7, C30 AND R50.
LARGE CIRCUIT CARD IS PC14c

PC14

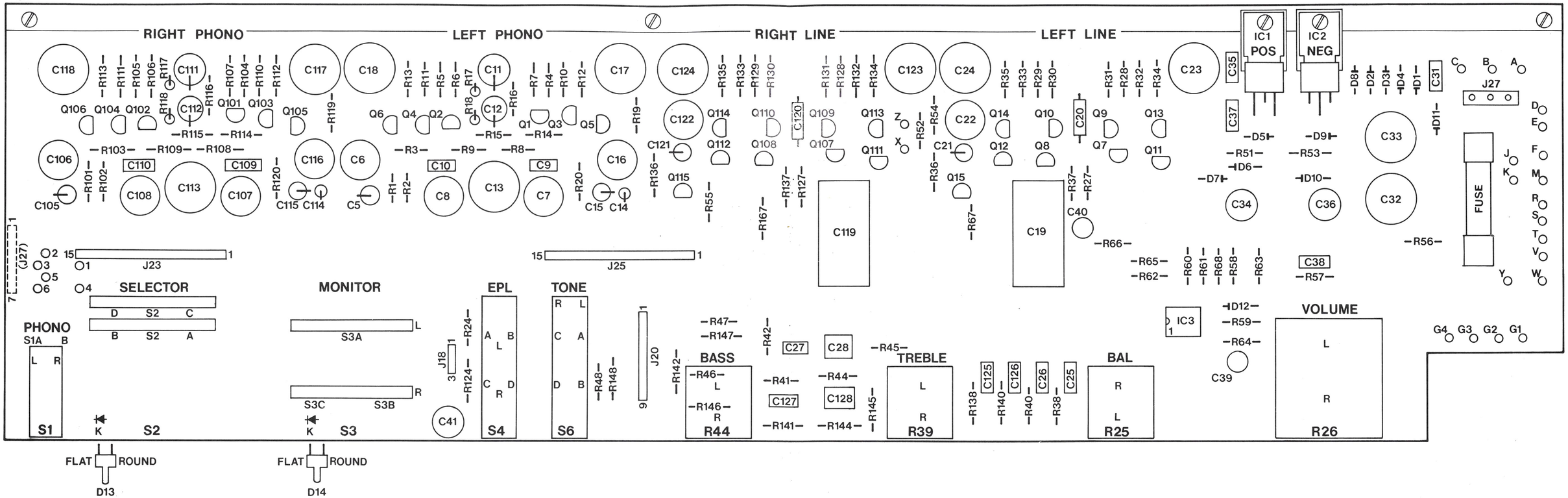
RIGHT PHONO
LEFT PHONO
RIGHT LINE
LEFT LINE
IC1 POS
IC2 NEG
J27
FUSE
SELECTOR
MONITOR
EPL
TONE
PHONO
S1A
S1
S2
S3
S4
S6
J23
J25
J18
J20
BASS
R44
TREBLE
R39
BAL
R25
VOLUME
R26
IC3
C39
C40
C41
FLAT ROUND
D13
D14

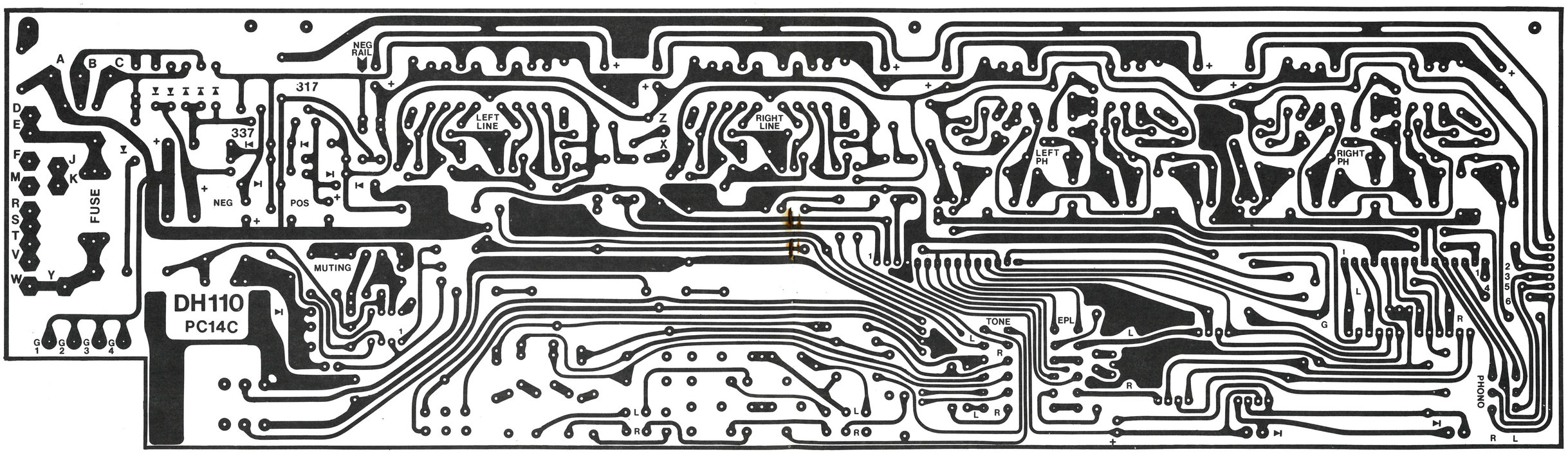
NEG RAIL
317
337
NEG
POS
LEFT LINE
RIGHT LINE
LEFT PH
RIGHT PH
FUSE
MUTING
DH110
PC14C
TONE
EPL
PHONO