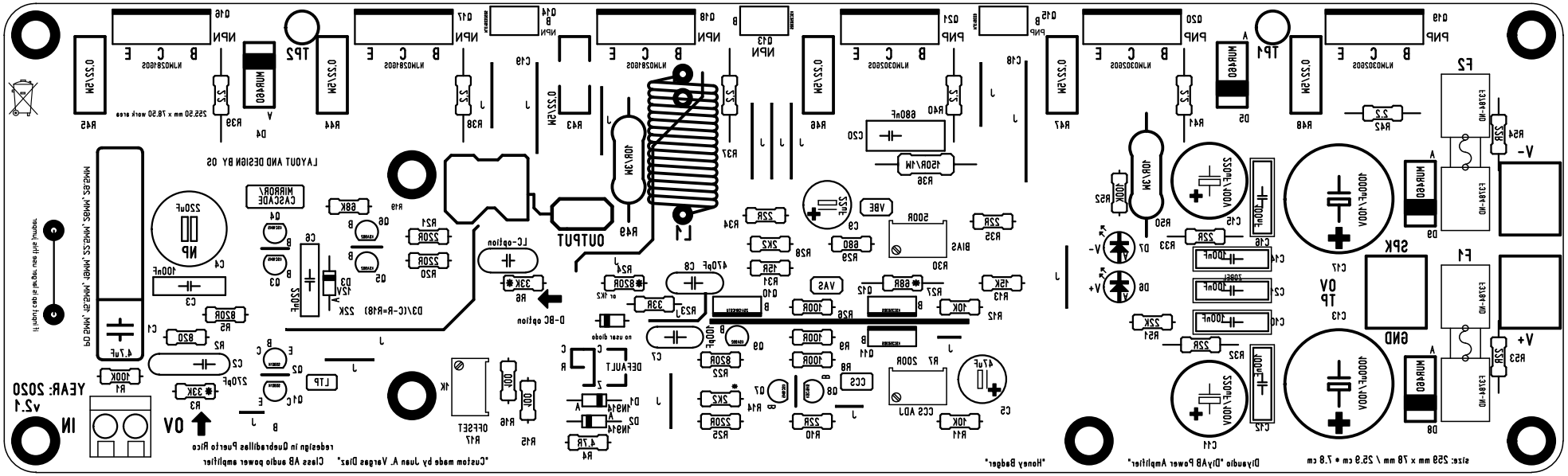

YEAR: 2020
v2.1
IN
0V
OUTPUT
LC-option
D-BC option
LAYOUT AND DESIGN BY OS
redesign in Quebradillas Puerto Rico
"Custom made by Juan A. Vargas Diaz"
Class AB audio power amplifier
"Honey Badger"
Diyaudio "DiyAB Power Amplifier"
size: 259 mm x 78 mm / 25.9 cm * 7.8 cm