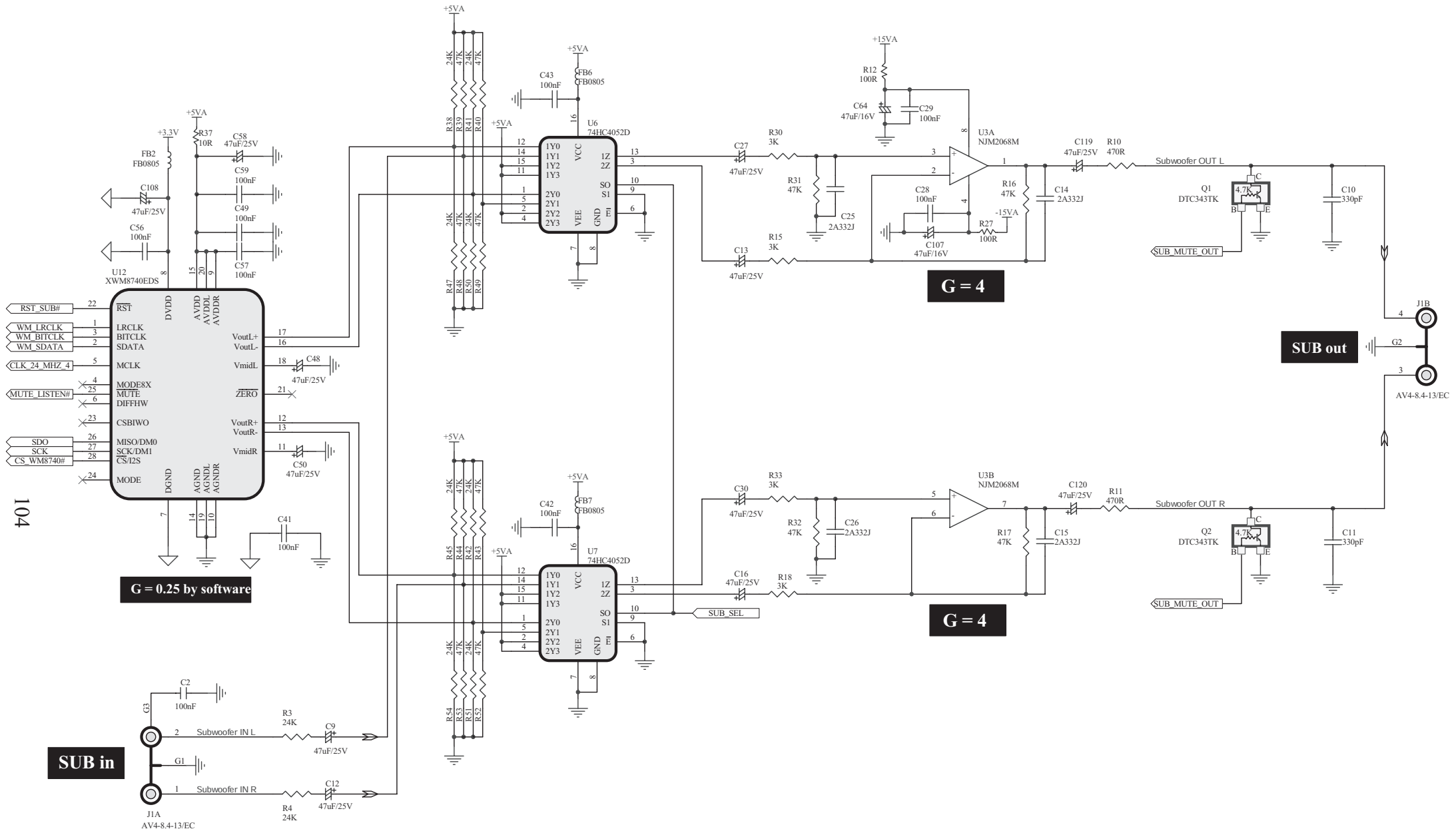
U12
XWM8740EDS
RST_SUB#
WM_LRCLK
WM_BITCLK
WM_SDATA
CLK_24_MHZ_4
MUTE_LISTEN#
SDO
SCK
CS_WM8740#
RST
LRCLK
BITCLK
SDATA
MCLK
MODE8X
MUTE
DIFFHW
CSBIWO
MISO/DM0
SCK/DM1
CS/I2S
MODE
DVDD
AVDD
AVDDL
AVDDR
DGND
AGND
AGNDL
AGNDR
VoutL+
VoutL-
VmidL
ZERO
VoutR+
VoutR-
VmidR
+3.3V
+5VA
FB2
FB0805
R37
10R
C58
47uF/25V
C59
100nF
C49
100nF
C57
100nF
C108
47uF/25V
C56
100nF
C48
47uF/25V
C50
47uF/25V
C41
100nF
G = 0.25 by software
U6
74HC4052D
U7
74HC4052D
1Y0
1Y1
1Y2
1Y3
2Y0
2Y1
2Y2
2Y3
VCC
VEE
GND
1Z
2Z
SO
S1
E
C43
100nF
FB6
FB0805
C42
100nF
FB7
FB0805
R38
R39
R41
R40
R47
R48
R50
R49
R45
R44
R42
R43
R54
R53
R51
R52
24K
47K
SUB_SEL
C27
47uF/25V
C13
47uF/25V
R30
3K
R15
3K
R31
47K
C25
2A332J
+15VA
R12
100R
C64
47uF/16V
C29
100nF
U3A
NJM2068M
C28
100nF
C107
47uF/16V
R27
100R
-15VA
R16
47K
C14
2A332J
C119
47uF/25V
R10
470R
Subwoofer OUT L
Q1
DTC343TK
4.7K
SUB_MUTE_OUT
C10
330pF
G = 4
C30
47uF/25V
R33
3K
R32
47K
C26
2A332J
C16
47uF/25V
R18
3K
U3B
NJM2068M
R17
47K
C15
2A332J
C120
47uF/25V
R11
470R
Subwoofer OUT R
Q2
DTC343TK
C11
330pF
G = 4
SUB out
J1B
AV4-8.4-13/EC
G2
SUB in
J1A
AV4-8.4-13/EC
G3
G1
C2
100nF
R3
24K
R4
24K
C9
47uF/25V
C12
47uF/25V
Subwoofer IN L
Subwoofer IN R