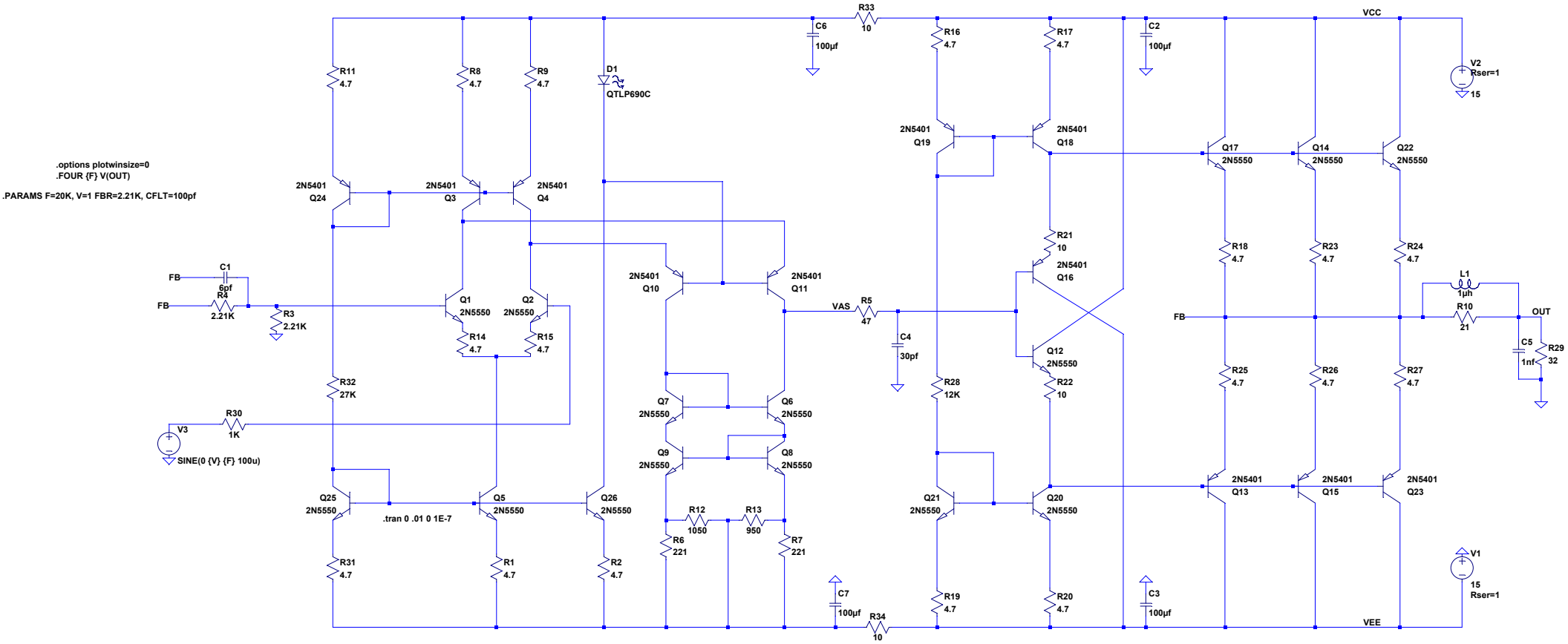

--- C:\dt_projects\HA-Disc-Mark I\HA.asc ---