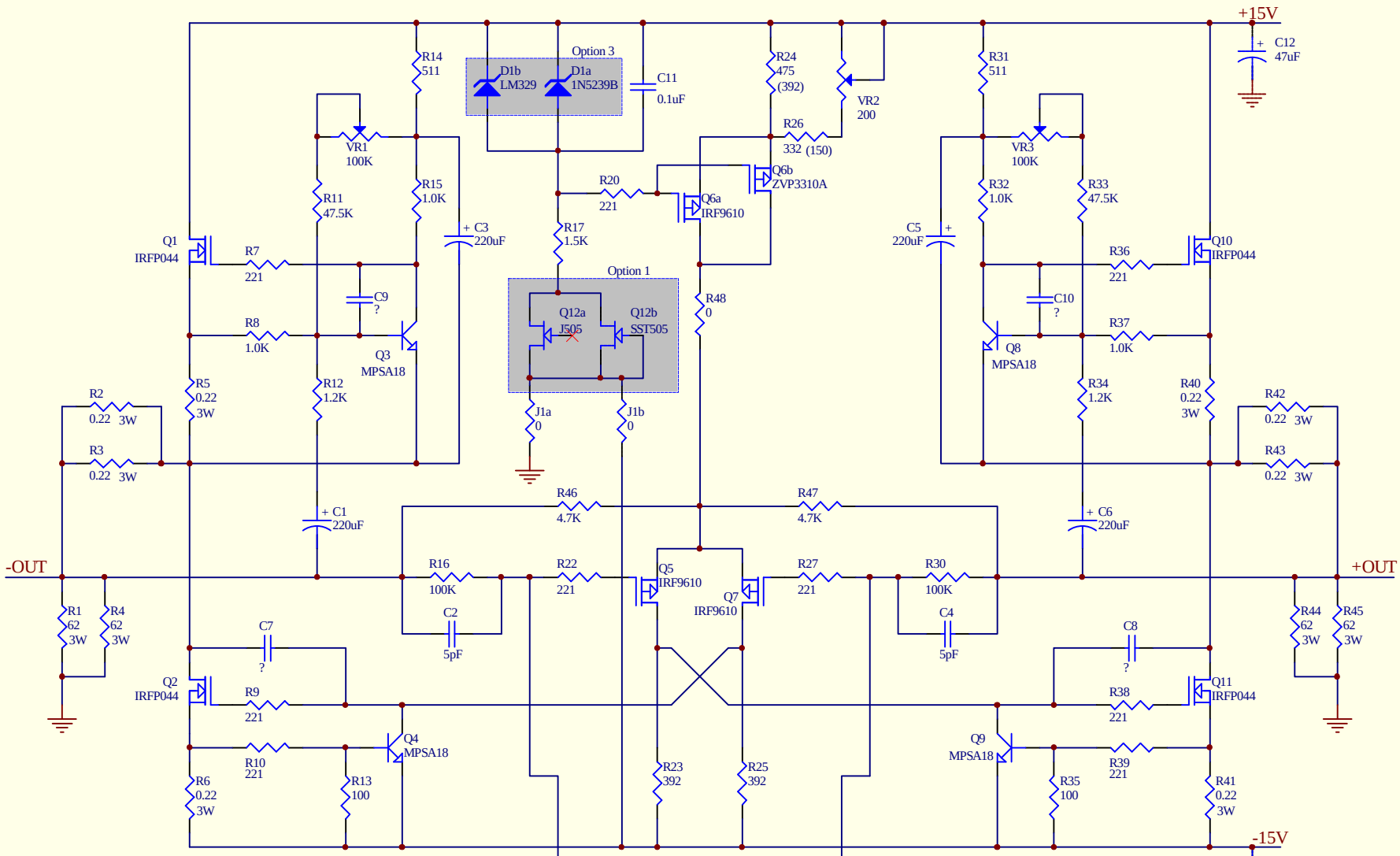

Option 1: Install one of either Q12a or Q12b. Alternately, install a jumper across Q12a.
Option 2: Install one of either J1a or J1b.
Option 3: Install one of either D1a or D1b.

- C11: can be used to improve voltage reference noise, but may create turn-on/off thump problems.
- C2, C4, C7-C10: these capacitors are provided to allow frequency compensation and stabilize the amplifier circuit. Apply as necessary.
- R24, R26, VR2: Standard values are shown for use with D1a. The values shown in brackets are for use with D1b. Adjust as necessary for proper current source operation.
- R17: if Q12a/b is omitted, select for proper current through D1a/b. If Q12a/b is installed, select to take up excess voltage, but leave a few volts margin for Q12 to operate.

XLR connector:
1. +IN
2. GND
3. -IN

Title	*Aleph-X*		
Size: Letter	Number:	Revision: 1.0	
File: C:\ProtelProjects\Aleph-X\PCB - rev1.0.ddb	Date: 30-Jan-2003	Time: 00:47:55	Sheet 1 of 1

Protel Technology