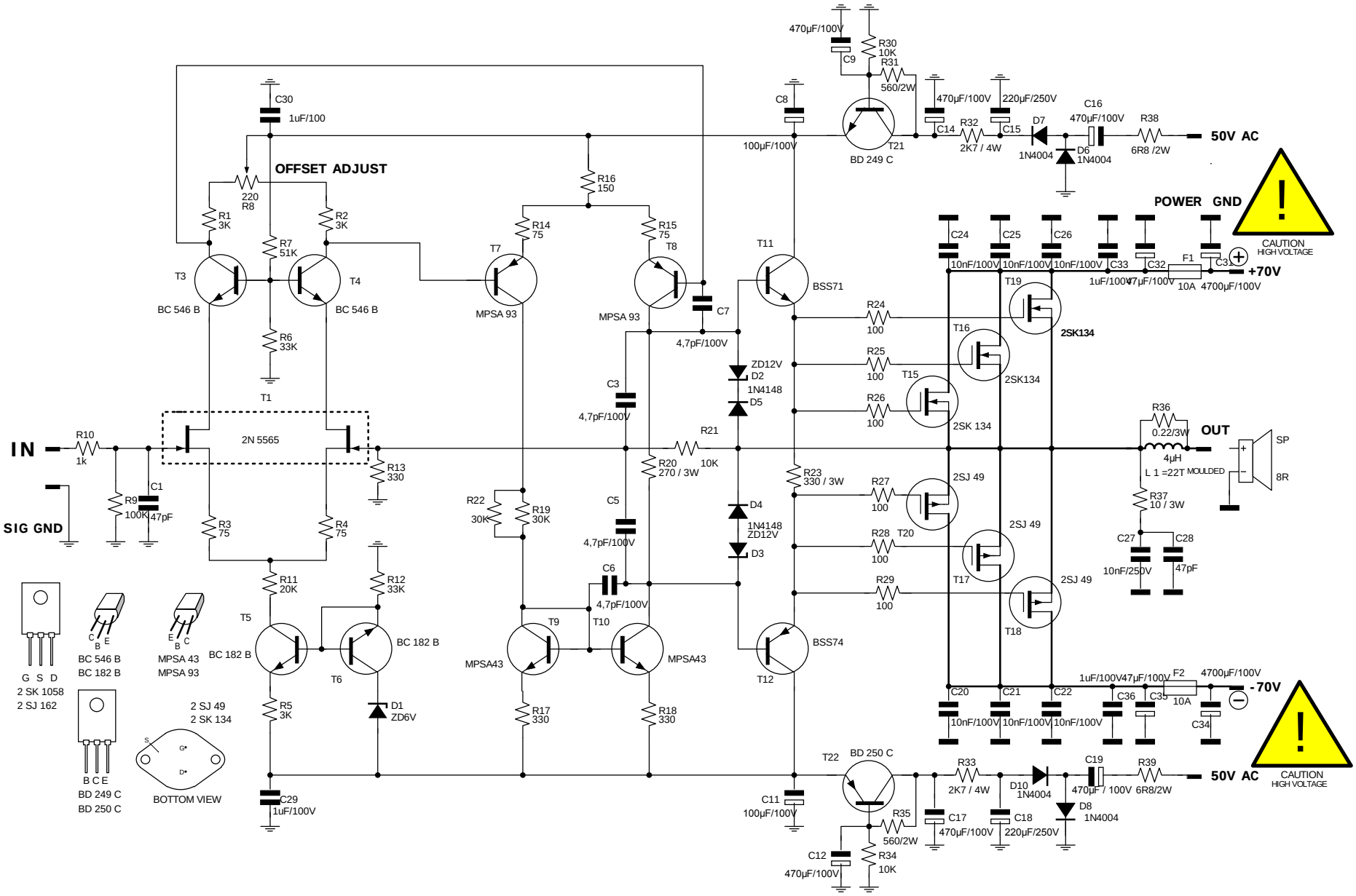GOLDMUND AUDIO AMPLIFIER SCHEMATIC