GOLDMUND AUDIO AMPLIFIER SCHEMATIC
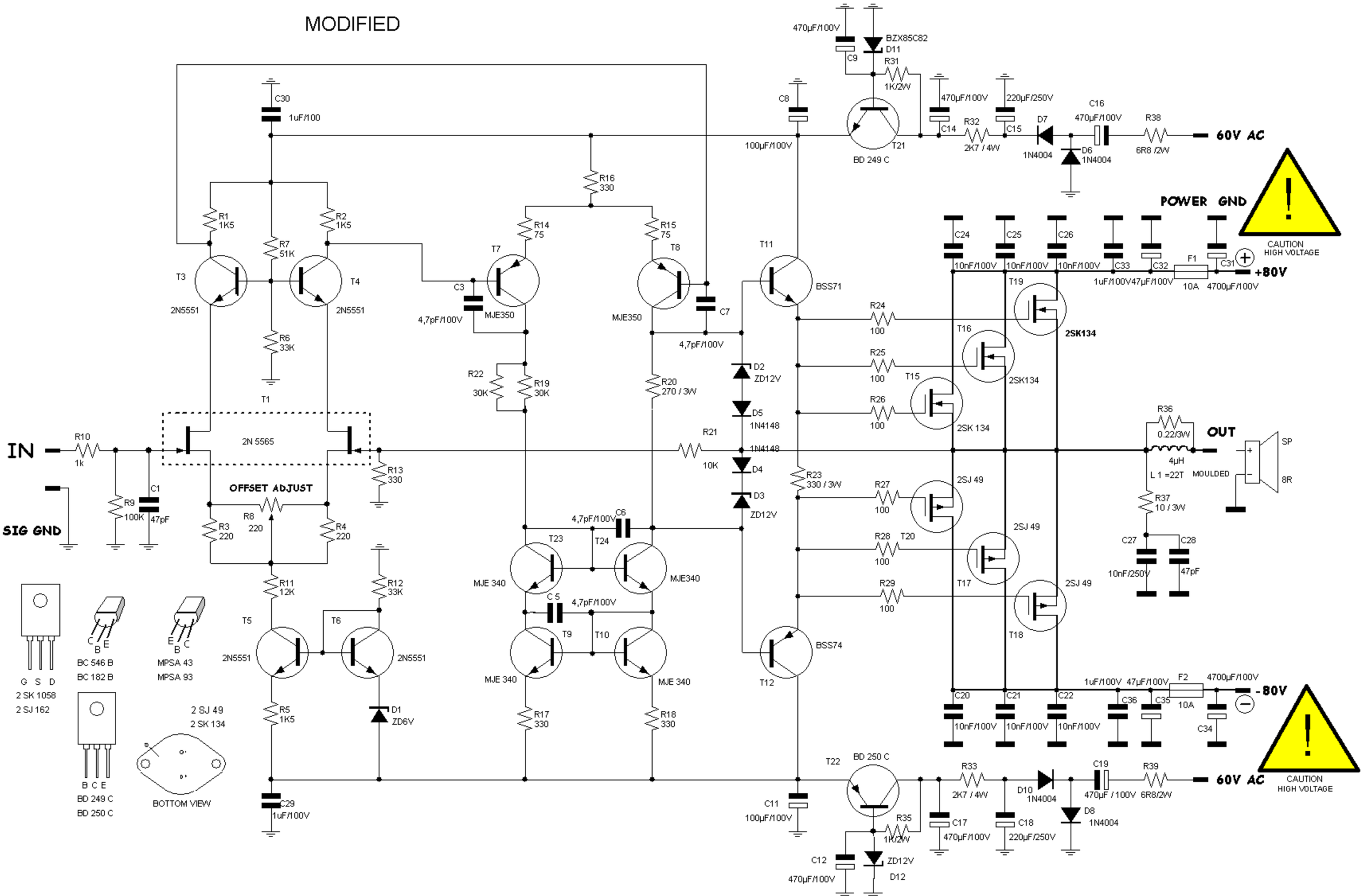
MODIFIED