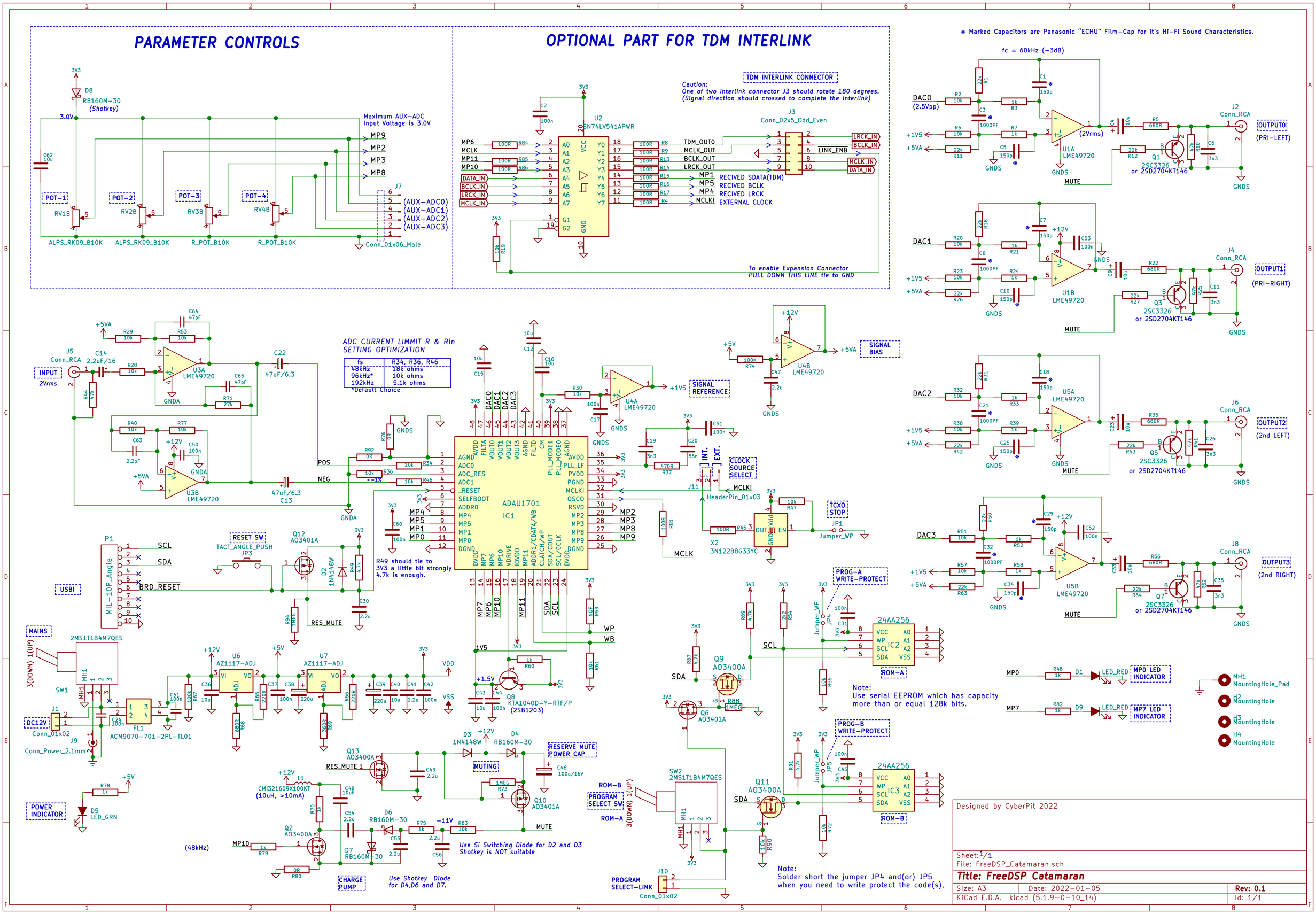
PARAMETER CONTROLS
OPTIONAL PART FOR TDM INTERLINK
* Marked Capacitors are Panasonic "ECHU" Film-Cap for it's Hi-Fi Sound Characteristics.
fc = 60kHz (-3dB)
Maximum AUX-ADC Input Voltage is 3.0V
TDM INTERLINK CONNECTOR
Caution: One of two interlink connector J3 should rotate 180 degrees. (Signal direction should crossed to complete the interlink)
To enable Expansion Connector PULL DOWN THIS LINE tie to GND
ADC CURRENT LIMMIT R & Rin SETTING OPTIMIZATION
fs | R34, R36, R46
48kHz | 18k ohms
96kHz* | 10k ohms
192kHz | 5.1k ohms
*Default Choice
ADAU1701 IC1
R49 should tie to 3V3 a little bit strongly 4.7k is enough.
Use Si Switching Diode for D2 and D3 Shotkey is NOT suitable
Use Shotkey Diode for D4,D6 and D7.
Note: Use serial EEPROM which has capacity more than or equal 128k bits.
Note: Solder short the jumper JP4 and(or) JP5 when you need to write protect the code(s).
Designed by CyberPit 2022
Sheet: 1/1
File: FreeDSP_Catamaran.sch
Title: FreeDSP Catamaran
Size: A3
Date: 2022-01-05
Rev: 0.1
KiCad E.D.A. kicad (5.1.9-0-10_14)
Id: 1/1