Combination Buffer, Mixer, Gain Circuit

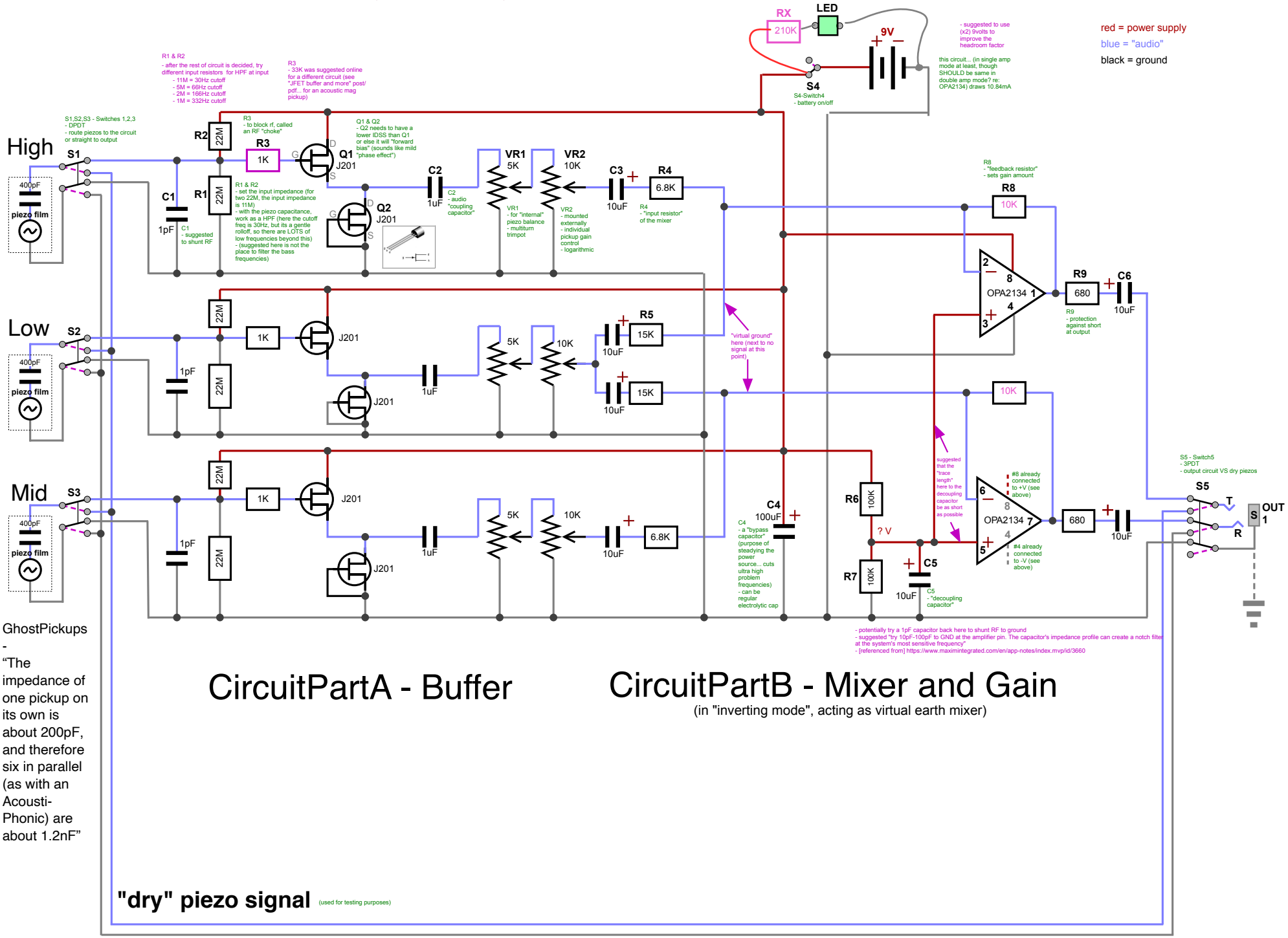

GhostPickups - "The impedance of one pickup on its own is about 200pF, and therefore six in parallel (as with an Acousti-Phonic) are about 1.2nF"