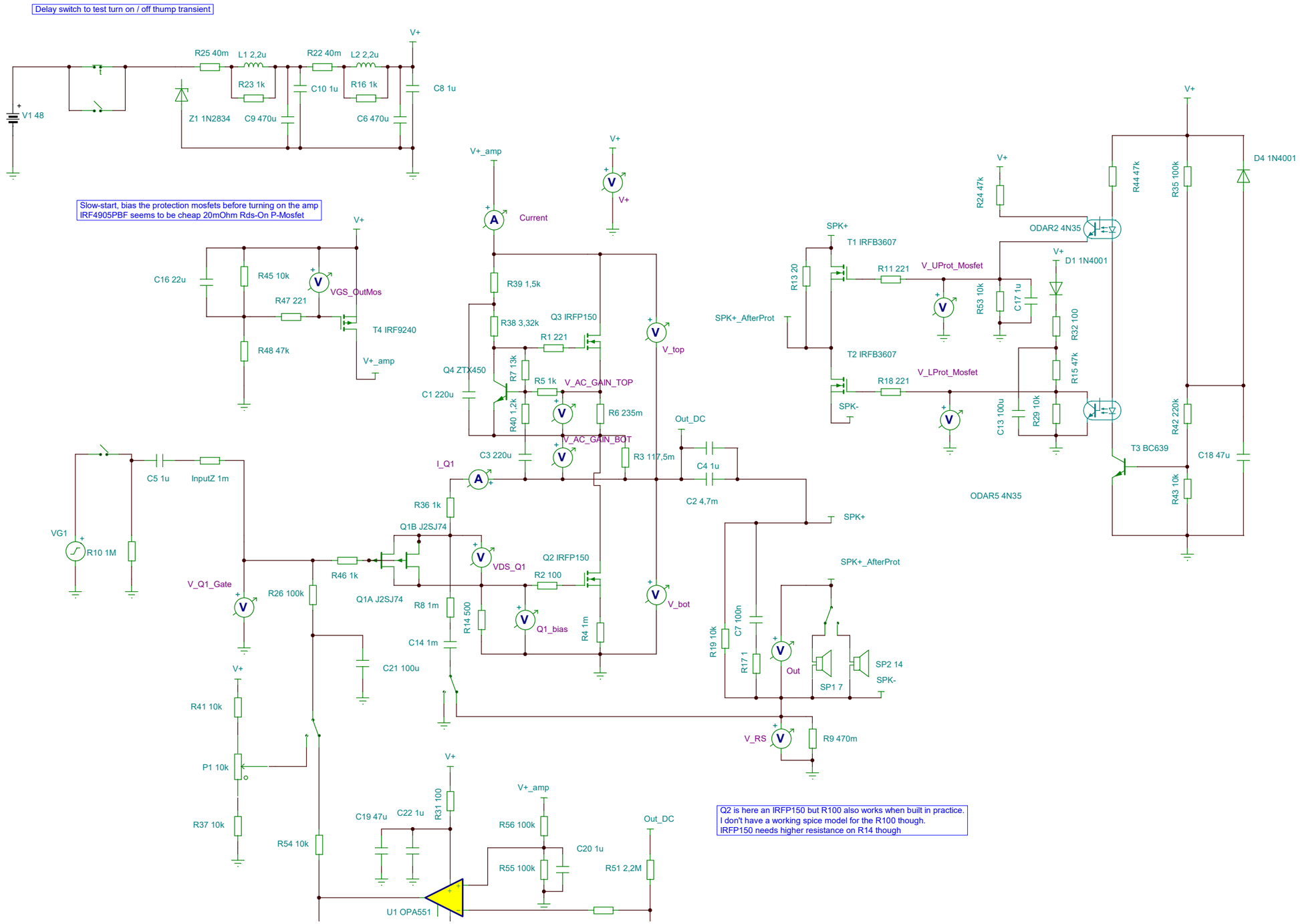
Delay switch to test turn on / off thump transient
V+
R25 40m
L1 2,2u
R22 40m
L2 2,2u
R23 1k
C10 1u
R16 1k
C8 1u
V1 48
Z1 1N2834
C9 470u
C6 470u
Slow-start, bias the protection mosfets before turning on the amp
IRF4905PBF seems to be cheap 20mOhm Rds-On P-Mosfet
C16 22u
R45 10k
VGS_OutMos
R47 221
T4 IRF9240
R48 47k
V+_amp
Current
R39 1,5k
R38 3,32k
Q3 IRFP150
R1 221
V_top
Q4 ZTX450
R7 13k
R5 1k
V_AC_GAIN_TOP
C1 220u
R40 1,2k
R6 235m
V_AC_GAIN_BOT
Out_DC
C3 220u
R3 117,5m
C4 1u
I_Q1
C2 4,7m
R36 1k
Q1B J2SJ74
SPK+
VGS_Q1
Q2 IRFP150
R2 100
SPK+_AfterProt
V_Q1_Gate
R26 100k
R46 1k
Q1A J2SJ74
R8 1m
R14 500
Q1_bias
R4 1m
V_bot
C14 1m
C21 100u
C7 100n
R19 10k
R17 1
Out
SP2 14
SP1 7
SPK-
V_RS
R9 470m
C5 1u
InputZ 1m
VG1
R10 1M
R41 10k
P1 10k
R37 10k
R54 10k
C19 47u
C22 1u
R31 100
R56 100k
C20 1u
R55 100k
R51 2,2M
U1 OPA551
Q2 is here an IRFP150 but R100 also works when built in practice.
I don't have a working spice model for the R100 though.
IRFP150 needs higher resistance on R14 though
R24 47k
ODAR2 4N35
R44 47k
R35 100k
D4 1N4001
T1 IRFB3607
R13 20
R11 221
V_UProt_Mosfet
R53 10k
C17 1u
D1 1N4001
R32 100
SPK+_AfterProt
T2 IRFB3607
R18 221
V_LProt_Mosfet
R15 47k
SPK-
C13 100u
R29 10k
T3 BC639
R42 220k
C18 47u
R43 10k
ODAR5 4N35

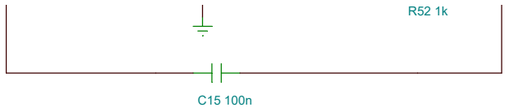
R52 1k
C15 100n