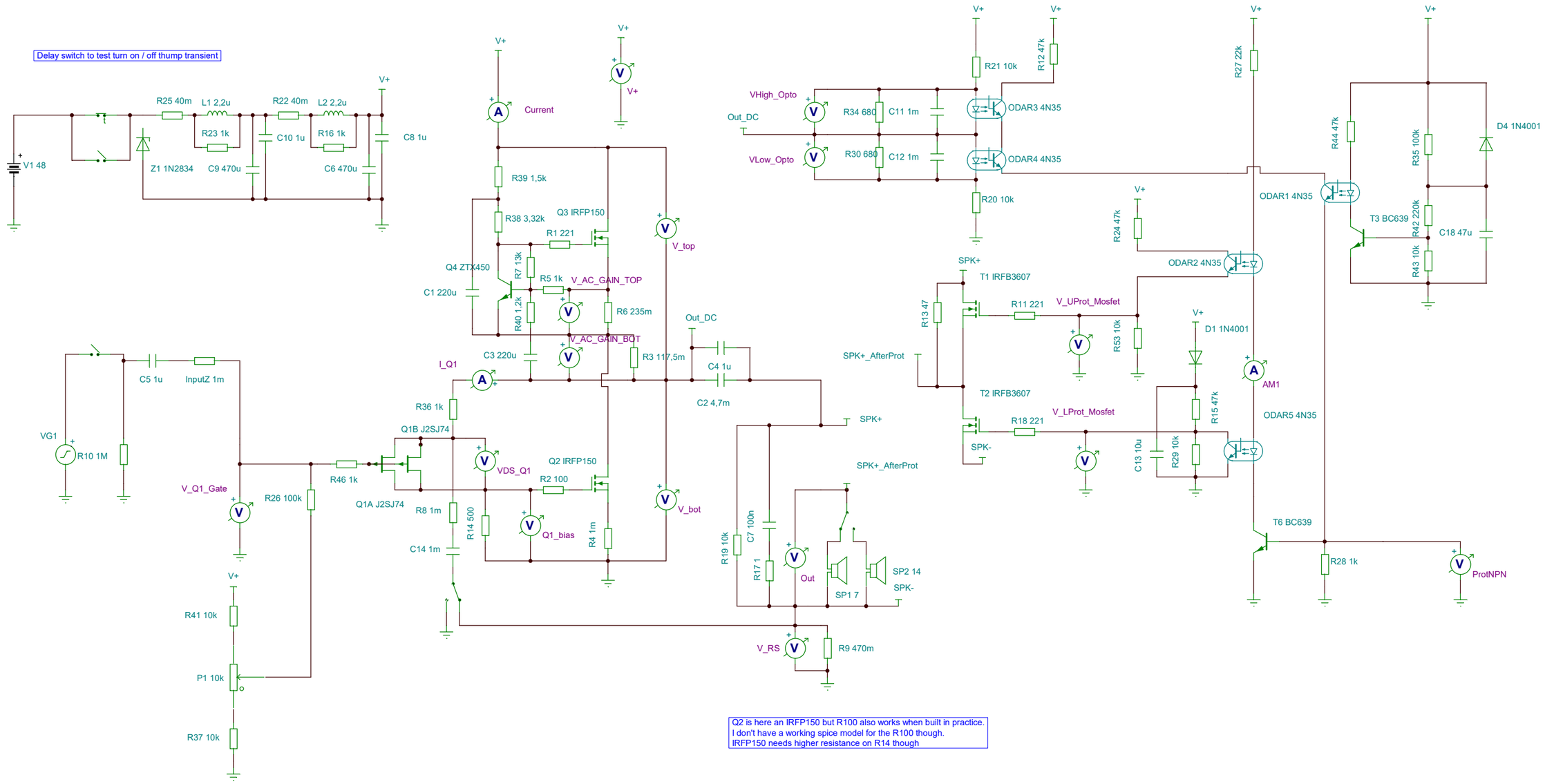
Delay switch to test turn on / off thump transient
V1 48
R25 40m
L1 2,2u
R23 1k
Z1 1N2834
C9 470u
C10 1u
R22 40m
L2 2,2u
R16 1k
C6 470u
C8 1u
V+
Current
R39 1,5k
R38 3,32k
Q3 IRFP150
R1 221
Q4 ZTX450
R7 13k
R5 1k
V_AC_GAIN_TOP
C1 220u
R40 1,2k
R6 235m
V_AC_GAIN_BOT
C3 220u
R3 117,5m
Out_DC
C4 1u
C2 4,7m
V_top
I_Q1
R36 1k
Q1B J2SJ74
VDS_Q1
Q2 IRFP150
R2 100
Q1A J2SJ74
R8 1m
R14 500
Q1_bias
R4 1m
C14 1m
V_bot
R46 1k
V_Q1_Gate
R26 100k
VG1
R10 1M
C5 1u
InputZ 1m
R41 10k
P1 10k
R37 10k
VHigh_Opto
VLow_Opto
R34 680
C11 1m
R30 680
C12 1m
R21 10k
R12 47k
ODAR3 4N35
ODAR4 4N35
R20 10k
R19 10k
C7 100n
R17 1
Out
SP1 7
SP2 14
SPK+
SPK-
SPK+_AfterProt
V_RS
R9 470m
R27 22k
R24 47k
ODAR1 4N35
ODAR2 4N35
T1 IRFB3607
T2 IRFB3607
R13 47
R11 221
V_UProt_Mosfet
R53 10k
D1 1N4001
R18 221
V_LProt_Mosfet
C13 10u
R29 10k
R15 47k
AM1
ODAR5 4N35
T6 BC639
R28 1k
ProtNPN
R44 47k
R35 100k
D4 1N4001
T3 BC639
R42 220k
C18 47u
R43 10k
Q2 is here an IRFP150 but R100 also works when built in practice.
I don't have a working spice model for the R100 though.
IRFP150 needs higher resistance on R14 though