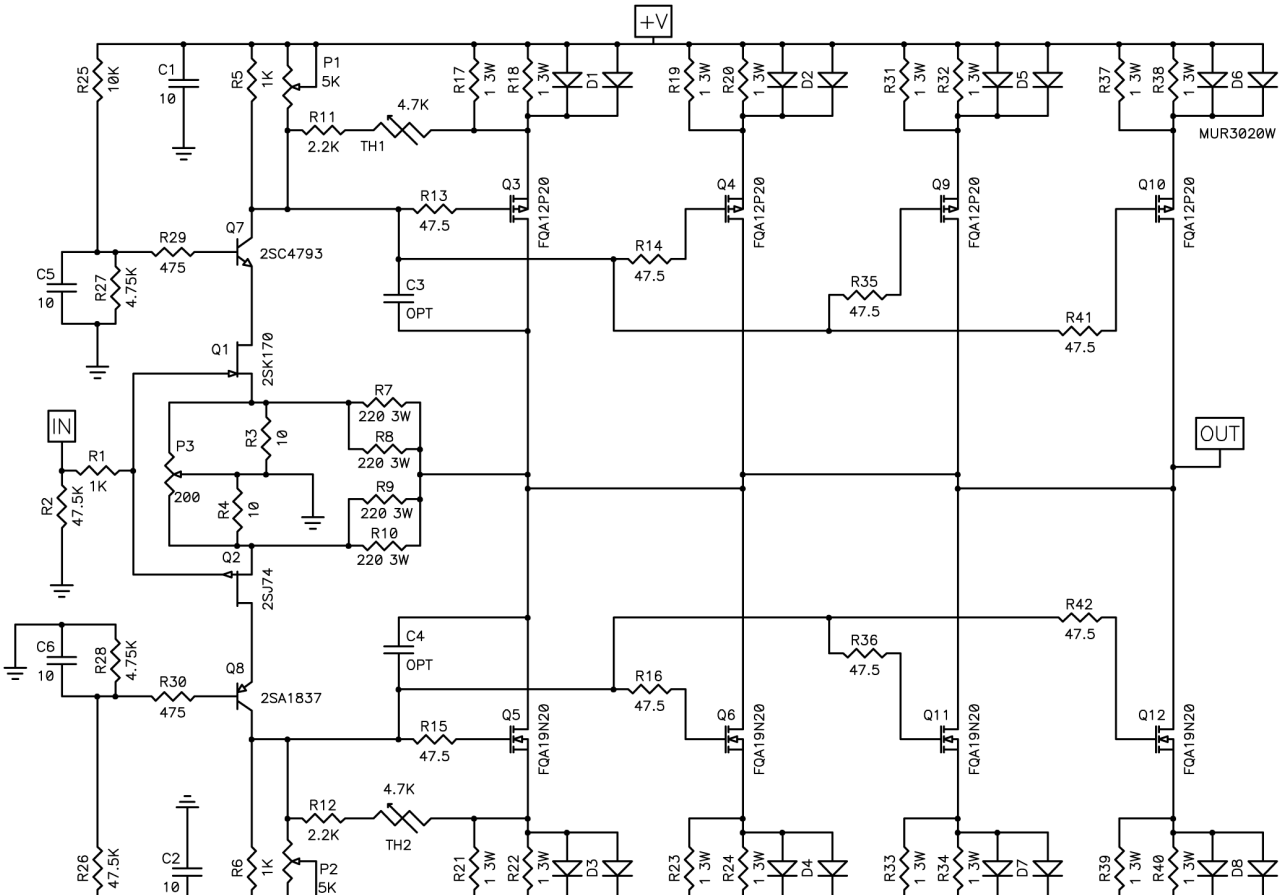

F5 TURBO V3

(C) 2012 NELSON PASS