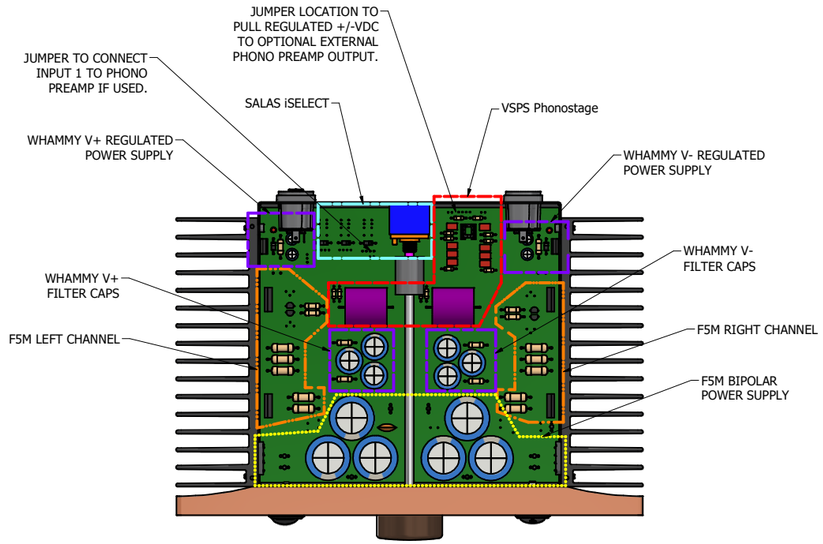

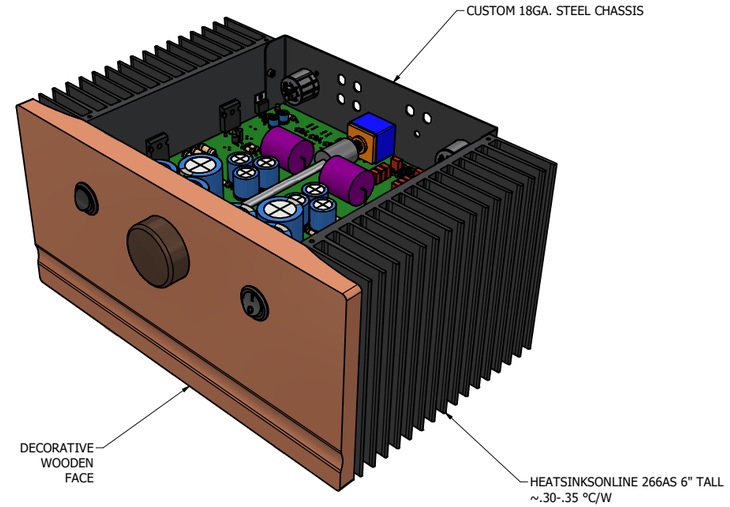

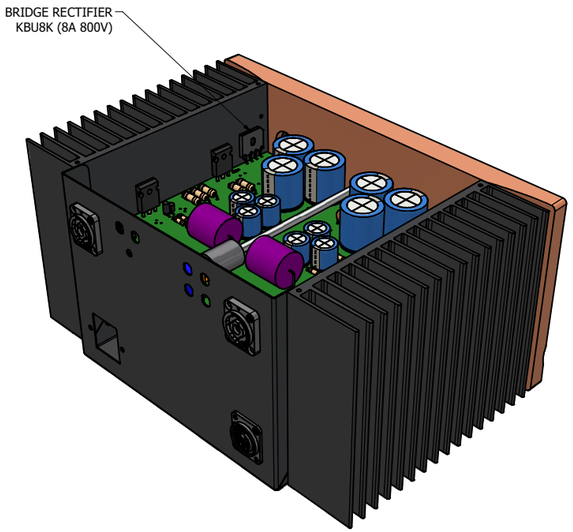

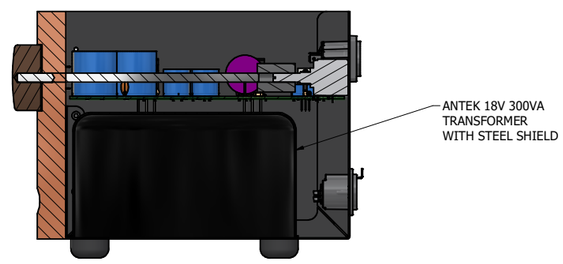

SECTION A-A
SCALE 1 / 2

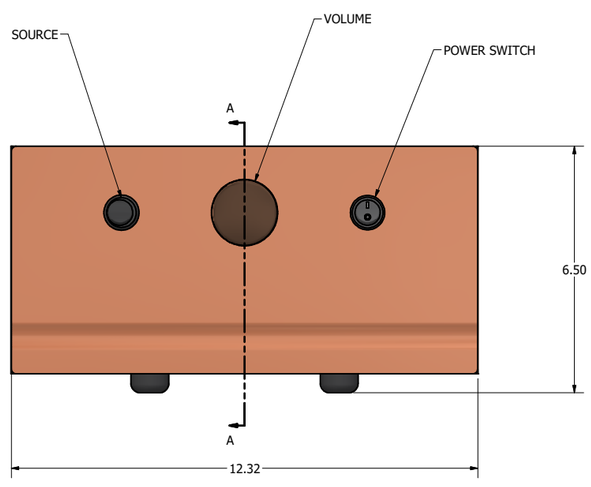

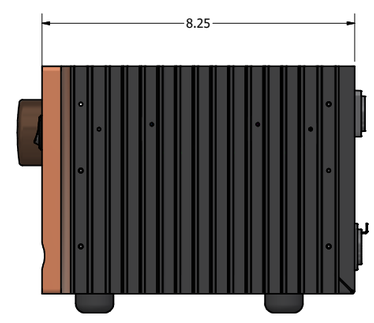

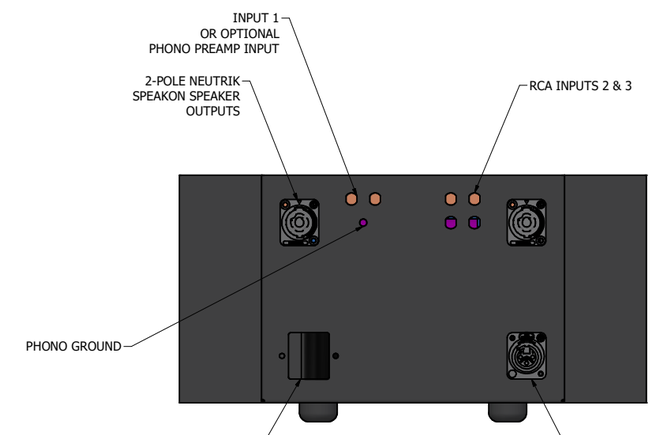

F5M INTEGRATED AMP
CHAS SAMPLE
8-19-2024