.model LSK489BL NJF(Beta=2m Betatce=-0.5 Vto=-1.80 Vtotc=-2.5m Lambda=5.7m Is=3f Xti=0 N=1 Rd=11 Rs=40 Cgd=3.19p Cgs=2.92p Fc=0.5 M=320m Pb=0.8 Kf=0.0009f Af=1 Gdsnoi=2.15 Nlev=3 Mfg=Linear_Systems)

Easy to set idle
VAS current dependent on RMe
Low temp dependency

.param RMe 90.9

Lower RL renders circuit biasing less critical and less temp dependent
5k or 3k THD20 is unchanged
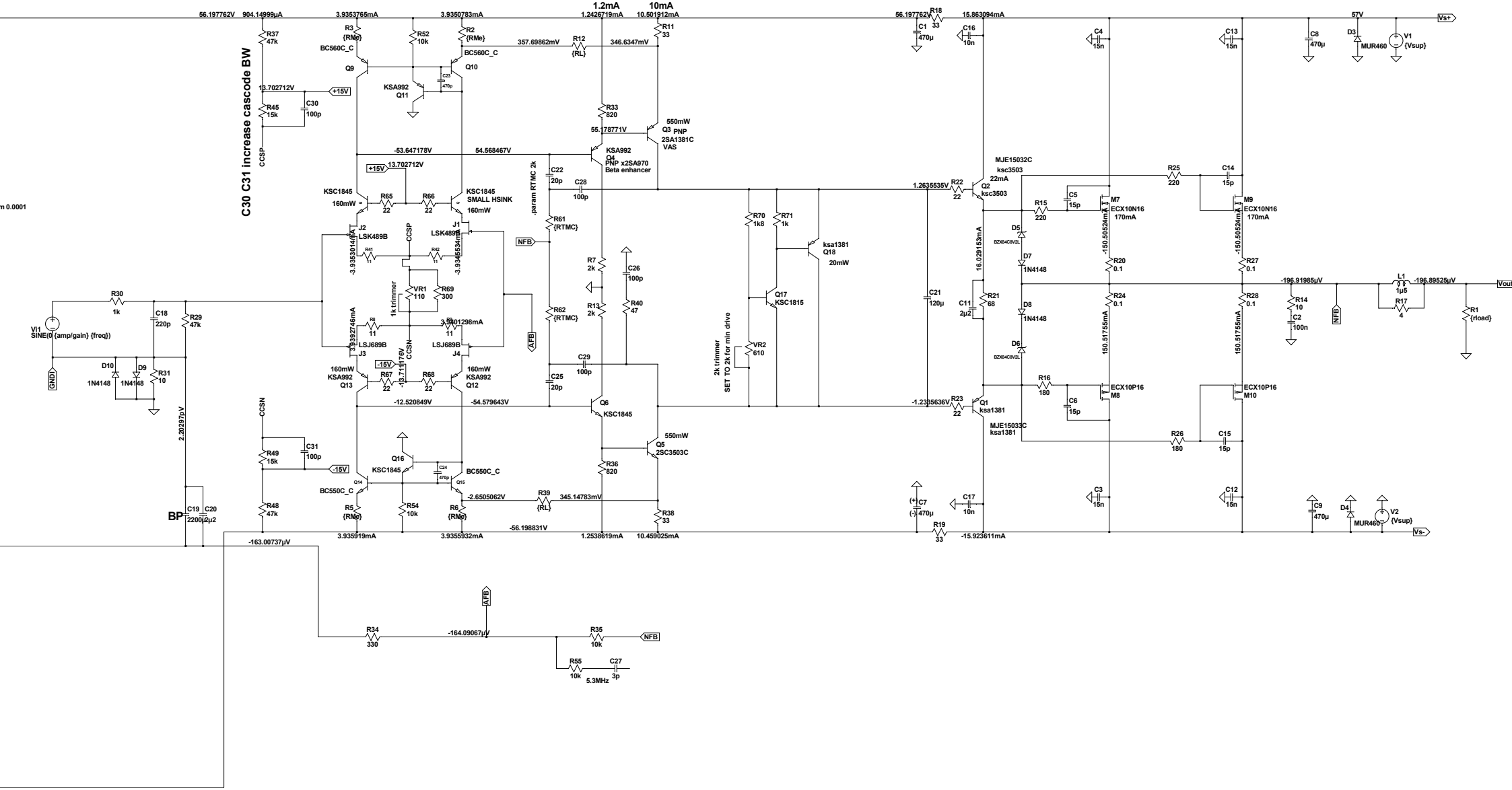
;step param RL LIST 1k 3k 5k
.param RL 5k1